QUARRY
COMMUNITY DEVELOPMENT DISTRICT

June 19, 2023
AGENDA PACKAGE

Quarry Community Development District

Board of Supervisors
Timothy B. Cantwell, Chairman
Dean Britt, Vice Chairman
William Patrick, Assistant Secretary
Mel Stuckey, Assistant Secretary
Rick Fingeret, Assistant Secretary

District Staff
Justin Faircloth, District Manager
Wes Haber, District Counsel
Albert Lopez, District Engineer

Meeting Agenda
Monday June 19, 2023 at 1:00 p.m.
Quarry Golf Club
8950 Weathered Stone Drive, Naples, FL 34120

Call in meeting number: 1-646-838-1601, Meeting ID: 951-092-195#

---

1. **Call to Order**
2. **Pledge of Allegiance**
3. **Approval of Agenda**
4. **Public Comments on Agenda Items**
5. **Engineer's Report**
   A. Water Quality Monitoring Report, May 2023
   B. Phase I & II Shoreline Restoration Update
   C. Fieldstone Lane Drainage Improvement Update
   D. Copper Canyon Court Drainage Discussion
   E. Seaweed Collection Discussion
   F. Variance Easement Report Update
      i. 9389 Copper Canyon Court Update
      ii. 9792 Nickel Ridge Update
      iii. 9332 Granite Court Update
      iv. 9262 Marble Stone Drive Update
      v. 9179 Flint Court Update
      vi. 9388 Slate Court Dock Lift Installation
6. **New Business**
7. **Old Business**
8. **District Manager's Report**
   A. Approval of the May 15, 2023 Minutes
   B. Acceptance of the Financial Report, and Approval of the Check Register and Invoices as of May 2023
   C. FY 2024 Budget Discussion
   D. Follow-up Items
9. **Attorney's Report**
   A. June 5, 2023 Memo Regarding Sunshine Law and Public Records Law
10. **Supervisor Requests**
11. **Audience Comments**
12. **Adjournment**

Next meeting: Monday August 14, 2023 at 1:00 p.m.

Fifth Order of Business

5A

THE QUARRY
COMMUNITY DEVELOPMENT DISTRICT
COLLIER COUNTY, FLORIDA

WATER QUALITY MONITORING REPORT

MAY 2023

Engineers
Architects
Planners
Surveyors
Landscape Architects
Traffic/Transportation
Environmental Scientists
Construction Management

CPH, LLC
2216 Altamont Ave.
Fort Myers, FL 33901
(239) 332-5499

WATER QUALITY MONITORING REPORT
MAY 2023

THE QUARRY COMMUNITY DEVELOPMENT DISTRICT
COLLIER COUNTY, FLORIDA

TABLE OF CONTENTS

Page

INTRODUCTION 1

DATA COLLECTION 1

RESULTS 2
- Temperature 5
- pH 5
- Dissolved Oxygen 5
- Phosphorus 6
- Nitrogen 6
- Chlorophyll *a* 7
- Salinity 7
- Conductivity 8

SUMMARY 8

TABLES

Table 1 April 2023 Water Quality Test Results 3

APPENDICES

APPENDIX A – FIGURES
FIGURE 1 Location Map
FIGURE 2 Sampling Location Map
FIGURE 3 Temperature Measurements October 2021 – April 2023
FIGURE 4 pH Measurements October 2021 – April 2023
FIGURE 5 Dissolved Oxygen Measurements October 2021 – April 2023
FIGURE 6 Phosphorus Measurements October 2021 – April 2023
FIGURE 7 Total Nitrogen Measurements October 2021 – April 2023
FIGURE 8 Chlorophyll *a* Measurements October 2021 – April 2023
FIGURE 9 Salinity Measurements October 2021 – April 2023
FIGURE 10 Conductivity Measurements October 2021 – April 2023

APPENDIX B – PHOTOGRAPHS OF SAMPLING LOCATIONS

INTRODUCTION

The Quarry is a residential development in northwestern Collier County (Figure 1, Appendix A). The Community Development District (CDD) maintains a stormwater management system which serves the community and the golf course. The system consists of inlet structures, conveyance pipes, control structures and man-made lakes. The water chemistry parameters measured are intended to assist with the characterization of conditions in the lakes to evaluate the water quality and its effect on the type of plants that grow in the lakes, the rate of growth, and the suitability of the lakes for fish and other wildlife. The South Florida Water Management District (SFWMD) permit authorizing development of the community requires perpetual maintenance of the stormwater management system so that it continues to function as designed. The permit also makes the permittee responsible for ensuring that the system does not cause violations of state water quality standards. This report provides the results of the monitoring event and provides a comparison to the results from the October 2021, April 2022, October 2022 and April 2023 events.

DATA COLLECTION

The field measurements and sample collection were conducted on March 29, 2023. All samples were collected and analyzed per Florida Department of Environmental Protection (FDEP) Standard Operating Procedures (SOP). Samples were collected from the photic zone, the surface layer where sunlight can influence growth of plants and algae. Samples were collected as grab samples at 1-2 feet from the surface as per FDEP aqueous sampling SOP. Disturbing sediments in the immediate area of sample collection was avoided. The locations of sampling points in each lake are depicted in Figure 2, Appendix A. The CDD initially selected 28 lakes for water quality monitoring. At the request of the CDD board, a second sampling location in Lake 30 was added beginning in March 2022. In 2023, the CDD accepted responsibility for three lakes previously under the control of the golf course – Lakes 57, 59 and 64. There are now a total of 32 sampling points in 31 lakes. Temperature, pH, dissolved oxygen, conductivity and salinity are measured in the field using a YSI Model 30, YSI Ecosense DO200A and a ThermoFisher Elite pH meter. Conductivity, salinity and pH are not expected to vary greatly but are measured to establish background levels and monitored so that any significant changes will be detected. Water samples were collected at each location, packed in ice and delivered to the laboratory for measurement of nutrients and chlorophyll *a*.

RESULTS

The results of the field measurements and laboratory testing are presented in Table 1. Photographs of the sample sites are provided in Appendix B. Lake levels appeared moderately low in April 2023, which is normal for the time of year.

Table 1. April 2023 Water Quality Test Results

CDD Lake No.	Sample Date	Sample Time	Sample Depth (ft.)	pH	Temp (°C)	DO (ppm)	Salinity (ppt)	Conductivity (µS/cm)	Chlorophyll a (mg/m^3)	Phosphorus (mg/L)	Kjeldahl N (mg/L)	Nitrate, Nitrite as N (mg/L)	Total Nitrogen (mg/L)	Aquatic Vegetation Observations
30	3/29/23	1610	1.5	7.7	28.5	8.9	0.2	441	5.3	0.027	0.75	U	0.75	Canna, Pondweed, Torpedograss, Hydrilla, Primrose, Spikerush, Arrowhead,
30x	3/29/23	1435	2	8.4	27.4	7.84	0.2	458	3.6	0.045	0.58	U	0.58	Pondweed
31	3/29/23	1635	1.5	7.5	27.9	9.80	0.2	550	16.9	U	0.62	U	0.62	Hydrilla
32	3/29/23	1705	1.5	7.7	29.5	10.2	0.2	439	9.8	U	0.81	U	0.81	Pondweed, Sand Cordgrass, Algae
33	3/29/23	1650	1.5	7.5	30.1	10.4	0.2	409	6.2	U	0.722	U	0.72	Sago Pondweed, Torpedograss, Algae
34	3/29/23	1655	1.5	7.7	29.0	9.40	0.2	374	10.7	0.056	0.91	U	0.91	Torpedograss, Fanwort, Sago Pondweed, Algae
35	3/29/23	1715	1.5	8.7	30.5	12.13	0.2	439	17.8	0.06	0.942	U	0.94	Primrose, Hydrilla, Algae
36	3/29/23	1700	1.5	8.6	31.0	8.63	0.2	385	16.9	U	0.78	U	0.78	Spikerush, Saltmeadow Cordgrass, Hydrilla
37	3/29/23	1725	1.5	8.7	28.2	9.62	0.2	434	14.2	0.02	1.08	U	1.08	Hydrilla
38	3/29/23	1650	1.5	8.6	30.8	13.12	0.2	492	16.9	0.093	0.72	0.04	0.76	Fanwort, Torpedograss, Hydrilla
40	3/29/23	1625	1.5	8.0	29.2	8.9	0.2	342	11.6	0.07	0.82	U	0.82	Arrowhead, Torpedograss, Primrose
41	3/29/23	1145	1.5	8.5	27.4	7.06	0.3	526	5.3	0.038	1.74	0.04	1.78	Pondweed, Spikerush, Torpedograss, Hydrilla, Algae
42	3/29/23	1130	1.5	8.5	27.4	7.34	0.3	560	4.5	0.06	0.98	0.05	1.03	Torpedograss, Hydrilla,
44	3/29/23	1200	1.5	8.5	27.8	8.24	0.2	524	8.9	0.163	1.21	0.02	1.23	Red Ludwigia, Torpedograss, Pickerelweed, Hydrilla, Algae
45	3/29/23	1215	1.5	8.5	28.6	7.27	0.2	491	U	0.159	1.06	U	1.06	Spikerush, Red Ludwigia, Torpedograss, Hydrilla, Algae

Qualifiers

U = The compound was not detected.

Highlighted results exceed or are below desired level

Spikerush = *Eleocharis cellulosa* , Arrowhead = *Sagittaria* sp., Pickerelweed = *Pontederia cordata* , Pondweed = *Potamogeton illinoensis* , Sago Pondweed = *Potamogeton pectinatus* , Fanwort = *Cabomba caroliniana* , Water Lily = *Nymphaea odorata* , Fireflag = *Thalia geniculata* , Red Ludwigia = *Ludwigia repens* , Sand Cordgrass = *Spartina bakeri* , Saltmeadow Cordgrass = *Spartina patens* , Torpedograss = *Panicum repens* , Primrose = *Ludwigia octovalvis* , Canna = *Canna* sp., Alligatorweed = *Alternanthera hydropiperoides* , Hydrilla = *Hydrilla verticillata* , Nitella = *Nitella* sp., Rush = *Juncus* sp., Bladderwort = *Utricularia* sp.

Table 1. April 2023 Water Quality Test Results (Continued)

CDD Lake No.	Sample Date	Sample Time	Sample Depth (ft.)	pH	Temp (°C)	DO (ppm)	Salinity (ppt)	Conductivity (µS/cm)	Chlorophyll a (mg/m^3)	Phosphorus (mg/L)	Kjeldahl N (mg/L)	Nitrate, Nitrite as N (mg/L)	Total Nitrogen (mg/L)	Aquatic Vegetation Observations
47	3/29/23	1300	1.5	8.6	29.0	8.24	0.2	454	6.2	0.303	1.02	U	1.02	Arrowhead, Rush, Canna, Saltmeadow Cordgrass,
48	3/29/23	1245	1.5	8.4	29.6	7.71	0.2	475	4.5	0.226	1.02	U	1.02	Pondweed, Red Ludwigia, Hydrilla
50	3/29/23	1425	1.5	8.2	29.2	7.06	0.3	584	9.8	0.029	1.04	0.02	1.06	Spikerush, Red Ludwigia, Fanwort, Hydrilla, Nitella, Bladderwort
53	3/29/23	1515	1.5	8.4	28.0	8.11	0.2	499	3.6	0.03	0.81	U	0.81	Rush, Algae
54	3/29/23	1415	1.5	8.3	28.6	8.12	0.2	461	18.7	0.082	0.85	0.02	0.87	Spikerush, Red Ludwigia, Fanwort, Hydrilla
55	3/29/23	1345	1.5	8.7	28.5	10.20	0.2	338	7.1	0.09	0.64	U	0.64	Arrowhead, Hydrilla, Torpedograss
56	3/29/23	1320	1.5	8.4	29.3	8.07	0.2	444	8.0	0.363	0.75	U	0.75	Pondweed, Spikerush, Hydrilla
57	3/29/23	1450	1	8.3	26.9	8.41	0.3	672	6.2	0.89	1.08	U	1.08	
58	3/29/23	1505	1.5	8.4	30.7	7.72	0.3	666	3.6	U	0.93	U	0.93	Pondweed, Water Lily
59	3/29/23	1520	1	8.4	28.4	7.68	0.3	671	2.7	0.03	0.97	U	0.97	
61	3/29/23	1545	1.5	8.5	31.2	8.30	0.2	458	3.6	0.027	0.79	0.04	0.83	Pondweed
62	3/29/23	1535	1.5	8.4	28.3	7.74	0.2	458	1.8	0.04	0.71	U	0.71	Pondweed, Water Lily, Torpedograss
63	3/29/23	1640	1.5	8.6	32.1	8.26	0.2	445	4.5	0.072	1.20	U	1.20	Pondweed, Fireflag
63A	3/29/23	1625	1.5	8.6	31.8	7.80	0.2	472	7.1	0.049	1.14	U	1.14	Spikerush, Fireflag, Water Lily, Hydrilla
63B	3/29/23	1630	1.5	8.6	29.1	8.03	0.2	409	3.6	U	1.10	U	1.10	Spikerush, Pondweed, Water Lily
64	3/29/23	1600	1	8.8	32.0	9.01	0.2	365	8.9	0.079	0.93	U	0.93	

Qualifiers

U = The compound was not detected.

Highlighted results exceed or are below desired level

Spikerush = *Eleocharis cellulosa* , Arrowhead = *Sagittaria* sp., Pickerelweed = *Pontederia cordata* , Pondweed = *Potamogeton illinoensis* , Sago Pondweed = *Potamogeton pectinatus* , Fanwort = *Cabomba caroliniana* , Water Lily = *Nymphaea odorata* , Fireflag = *Thalia geniculata* , Red Ludwigia = *Ludwigia repens* , Sand Cordgrass = *Spartina bakeri* , Saltmeadow Cordgrass = *Spartina patens* , Torpedograss = *Panicum repens* , Primrose = *Ludwigia octovalvis* , Canna = *Canna* sp., Alligatorweed = *Alternanthera hydropiperoides* , Hydrilla = *Hydrilla verticillata* , Nitella = *Nitella* sp., Rush = *Juncus* sp., Bladderwort = *Utricularia* sp.

Temperature

Normal temperature for freshwater lakes in Florida ranges from 24° - 30° Celsius (annual average). Temperature is used in analysis of dissolved oxygen values. Extremely high temperature can contribute to low oxygen levels, leading to fish kills. Extremely low temperature could kill aquatic organisms. Lake temperatures in April 2023 ranged from 26.9 – 32.0° C, which is normal for the time of year. The temperature measurements in all lakes for the last four monitoring events are shown in Figure 3, Appendix A.

pH

pH is an expression of the amount of hydrogen ions (H+) in the water. Distilled water has a pH of 7, which has equal amounts of hydrogen (H+) and hydroxide (OH-) ions. In southwest Florida lakes, pH can range between 4.44 and 10.04 with a median value of 7.29 (Romie, 2000).

The pH of the CDD lakes during the April 2023 monitoring event were within the normal range for south Florida lakes, ranging from 7.5 to 8.7. The pH of all lakes for the last four monitoring events are shown in Figure 4, Appendix A.

Dissolved Oxygen

The amount of oxygen that can be dissolved in water depends on several factors, including water temperature, salinity, and atmospheric pressure. On a relative scale, the amount of oxygen dissolved in saturated water will be greater in cooler waters than in warmer ones.

Oxygen enters waterbodies primarily by transfer from the atmosphere across the air-water interface and to a lesser extent by the action of photosynthetic organisms. DO levels typically follow a diurnal cycle – higher at the end of the day and lower at dawn. Fish typically require DO concentrations of approximately 5 parts per million (ppm) for optimum health. Exposure to DO levels below 2 ppm for 1 – 4 days will kill many aquatic organisms (Wilson, 2014).

During the monitoring event in April 2023, DO levels in the lakes ranged from 7.06 – 12.13 parts per million (ppm). The observed DO concentrations were normal and sufficient to sustain fish and other aquatic organisms in all lakes.

The dissolved oxygen levels in all lakes for the last four monitoring events are shown in Figure 5, Appendix A.

Phosphorus

Phosphorus is usually not available in the environment. Although natural phosphorus levels in surface water bodies are very low, human sources or activities such as fertilizer application, sewage spills and soil erosion can overload lakes with available phosphorus. Excess phosphorus introduced to a lake provides food for plants and algae and can increase the vegetation growth within a lake and have a negative impact on water quality.

The April 2023 sampling results show phosphorus levels ranging from 0 to 0.363 mg/L. Only Lakes 44, 47 and 56 were slightly above the maximum desirable level of 0.16 mg/L. The phosphorus levels in all lakes for the last four monitoring events are shown in Figure 6, Appendix A.

Nitrogen

Nitrogen is necessary for many natural biological processes. Excess nitrogen in the lakes can fuel the growth of excess algae or other undesirable plants. Total nitrogen concentration can be used in conjunction with other parameters including chlorophyll and phosphorus to determine a lake's trophic state - the degree of biological productivity of a waterbody. Trophic state determinations are based on regular, frequent monitoring for an extended period (typically at least two years). Generally speaking, total nitrogen concentrations of approximately 2 mg/m^3 are indicative of trophic states with "good" water quality (wateratlas.org, 2021).

In April 2023, the nitrogen levels observed in all lakes were within the normal range for Florida lakes, ranging from 0.58 – 1.78 mg/L. The total nitrogen levels in all lakes for the last four monitoring events are shown in Figure 7, Appendix A.

Phosphorus and Nitrogen are nutrients that support growth of plants including large rooted plants, algae and microscopic phytoplankton. Fertilizers, yard and pet waste and certain soaps and detergents contain nitrogen and phosphorus, and can contribute to nutrient pollution if not properly used or disposed (Fairchild, 2006). Atmospheric nitrogen is transferred to water bodies and deposited on hard surfaces where it can be carried into lakes by stormwater runoff. It is worth noting that the Quarry lakes are constructed for the purpose of detaining stormwater runoff so that pollutants, including nutrients, can be removed from the water through natural physical, chemical and biological processes. Therefore, it is expected that nutrients will be found in the lakes as part of their normal function. However, nutrients can fuel excessive macroalgae and phytoplankton growth. Plants produce oxygen through photosynthesis, but they also consume oxygen by

respiration in the absence of sunlight. In addition, decaying plant matter consumes oxygen. While nutrients enter the lakes by design, the nutrient load can be managed through the efforts and practices of the CDD, landscape workers, golf course groundskeepers and residents. Limiting the addition of nutrients from fertilizers, pet waste, detergents and yard waste will help keep the lakes functioning and more aesthetically pleasing.

Chlorophyll *a*

Chlorophyll *a* is an indicator of the abundance of planktonic algae found in the water column. Elevated chlorophyll *a* levels are directly correlated with reduced water clarity, odor and the potential for algae blooms. Chlorophyll *a* values can be expected to rise during the warmer months. Chlorophyll concentration is also used in conjunction with other parameters including nitrogen and phosphorus to determine a lake's trophic state - the degree of biological productivity of a waterbody. Trophic state determinations are based on regular, frequent monitoring for an extended period (typically at least two years). Generally speaking, chlorophyll *a* concentrations less than 20 mg/m^3 are indicative of trophic states with "good" water quality. Chlorophyll *a* concentrations between 20 and 40 mg/m^3 are indicative of "fair" water quality (wateratlas.org, 2021). Therefore, 40 mg/m^3 is considered the maximum desirable chlorophyll *a* concentration.

During the April 2023 sampling, the chlorophyll *a* levels in all lakes except Lakes 31, 35, 36, 38 and 54 were in the low range of 0 – 15 mg/m^3. Lakes 31, 35, 36, 38 and 54 were in the moderate range of 15.1 – 40 mg/m^3. During the monitoring event, lake observations appeared normal and healthy. Chlorophyll *a* levels in all lakes for the last four monitoring events are shown in Figure 8, Appendix A.

Salinity

The salt concentration is usually expressed in parts per thousand (ppt) or parts per million (ppm). Water salinity based on dissolved salts classifies a water body into three categories:

- Fresh water < 0.5 ppt
- Brackish water 0.5–30 ppt
- Saline water 30–50 ppt

In April 2023, the salinity in all of the monitored lakes was low, ranging from 0.2 - 0.3 ppt. This is within the normal range for man-made freshwater ponds in this region of Florida. The salinity measurements recorded in all lakes for the last four monitoring events are shown in Figure 9, Appendix A.

Conductivity

Conductivity measures the capacity of water to conduct an electric current and indirectly measures the concentration of ionized substances in water. Approximately 80% of Florida lakes have conductivity between 90 and 1000 µS/cm (Hand, 2004).

Conductivity values during the April 2023 monitoring event ranged from 338 – 671 µS/cm. These values are in the normal range for man-made lakes in this region of Florida. The conductivity measurements recorded in all lakes for the last four monitoring events are shown in Figure 10, Appendix A.

SUMMARY

In summary, the April 2023 water quality monitoring event shows:

- Lake temperatures were normal for the time of year.
- pH values were within the normal range for Florida lakes in this region. The pH range for the CDD lakes ranged from 7.5 to 8.7.
- The observed DO concentrations in all lakes During the April 2023 water quality sampling were normal and sufficient to sustain fish and other aquatic organisms in all lakes. There was no visible evidence that low dissolved oxygen was affecting aquatic life.
- The April 2023 sampling results show phosphorus levels ranging from 0 to 0.363 mg/L. Only Lakes 44, 47 and 56 were slightly above the maximum desirable level of 0.16 mg/L., therefore no action is recommended at this time.
- Nitrogen levels observed in all lakes were within the normal range for Florida lakes.
- The chlorophyll a level in lakes was low to moderate.
- Salinity and conductivity in all lakes were normal for freshwater lakes in Florida. Salinity values were similar in all lakes with a value of 0.2 - 0.3 ppt. Conductivity values ranged from 338 – 671 µS/cm.
- Based on visual observation, the lakes appear healthy with normal water levels and clarity. Nuisance vegetation management appears effective in the 31 CDD lakes monitored.

CPH has been conducting a similar monitoring program in the adjoining Heritage Bay community for several years. In general, the results of the April 2023 monitoring event indicate The Quarry lakes have similar conditions to the Heritage Bay lakes.

CITATIONS

Romie, Kenneth, *Water Chemistry of Lakes in the Southwest Florida Water Management District,* Resource Management Department, Southwest Florida Water Management District, February 2000.

Wilson, P. Chris, *Water Quality Notes: Dissolved* Oxygen, document SL313, Soil and Water Science Department, UF/IFAS Extension. Original publication date December 2009. Revised August 2014.

Hand, Joe, *Typical Values for Water Quality Parameters for Florida's Lakes, Streams and Estuaries,* Watershed Assessment Section, Bureau of Watershed Management Florida Department of Environmental Protection. October 2004.

Fairchild, J. F. and L. A. Vradenburg. *Fate and Effects of Nitrogen and Phosphorus in Shallow Vegetated Aquatic Ecosystems*. U.S. Environmental Protection Agency, Washington, D.C., EPA/600/R-06/058, 2006.

Florida LAKEWATCH, *A Beginner's Guide to Water Management in Florida Lakes; Fish Communities and Trophic State*, Information Circular 110, Department of Fisheries and Aquatic Sciences, Institute of Food and Agricultural Sciences, University of Florida, Gainesville, Florida, April 2007.

wateratlas.org, USF Water Institute, School of Geosciences, College of Arts and Sciences, University of South Florida, Tampa, Florida.

APPENDIX A

Figures

The Quarry CDD
May 2023
Water Quality Monitoring Report
Collier County, Florida

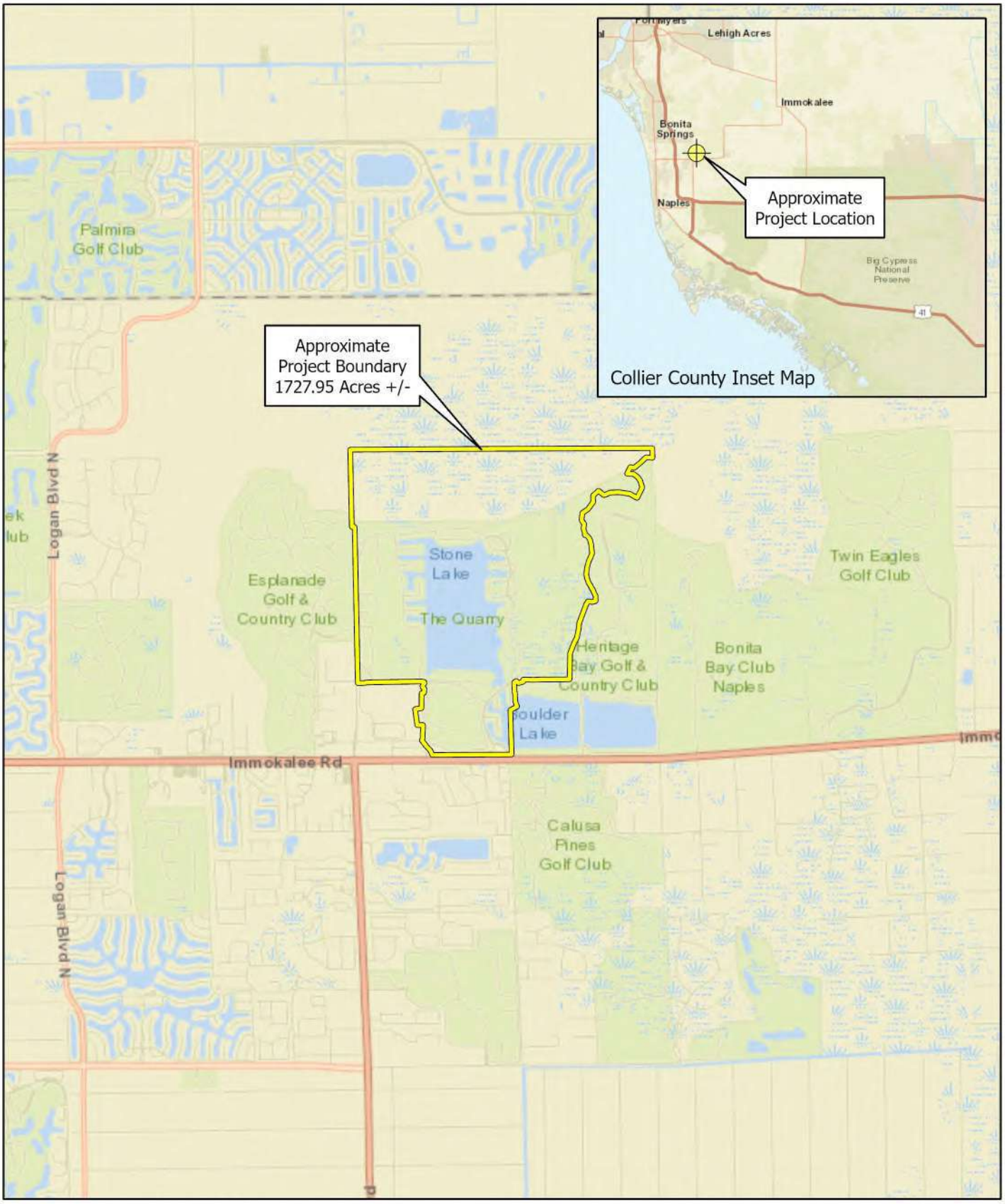

cph	Scale: 1 inch = 1 mile Date:5/17/2023 Photo Date: N/A Project No. Q0505.2 Biologist: DL GIS: ERR	N	LOCATION MAP THE QUARRY CDD SECTIONS 13, 14, 23, AND 24, TOWNSHIP 48 SOUTH, RANGE 26 EAST COLLIER COUNTY, FLORIDA

FIGURE 1

cph	Scale: 1 inch = 1,250 feet Date: 5/17/2023 Photo Date: 2019 Project No. Q0505.2 Biologist: DL GIS: ERR	N	LAKE SAMPLING LOCATIONS MAP THE QUARRY CDD SECTIONS 13, 14, 23, AND 24, TOWNSHIP 48 SOUTH, RANGE 26 EAST COLLIER COUNTY, FLORIDA

FIGURE 2

Normal Range = 24 Degrees - 30 Degrees C (Annual Average)

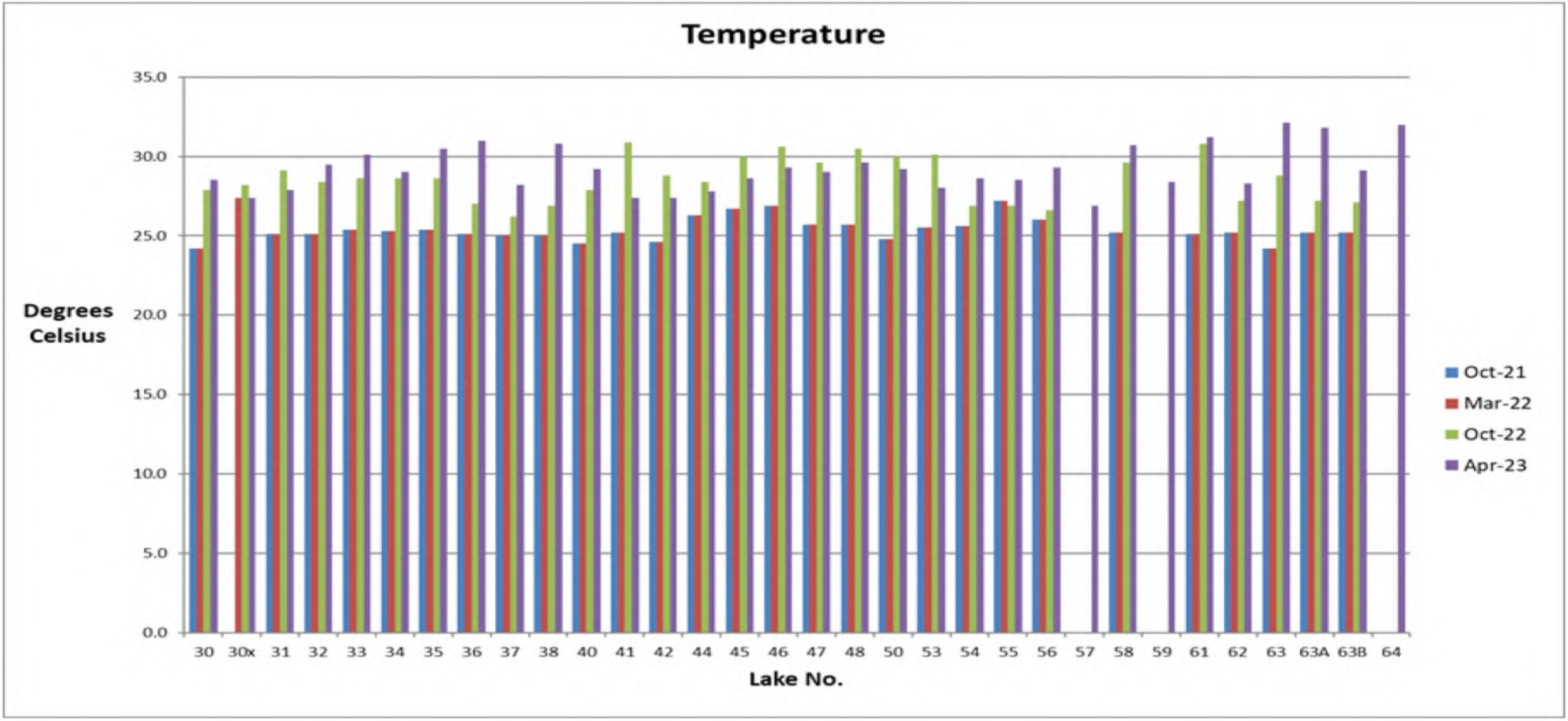

cph	Scale: N/A Date: 5/17/2023 Photo Date: N/A Project No. Q0505.2 Biologist: DL GIS: ERR	TEMPERATURE MEASUREMENTS OCT 2021 - APR 2023 THE QUARRY CDD SECTIONS 13, 14, 23, AND 24, TOWNSHIP 48 SOUTH, RANGE 26 EAST COLLIER COUNTY, FLORIDA	FIGURE 3

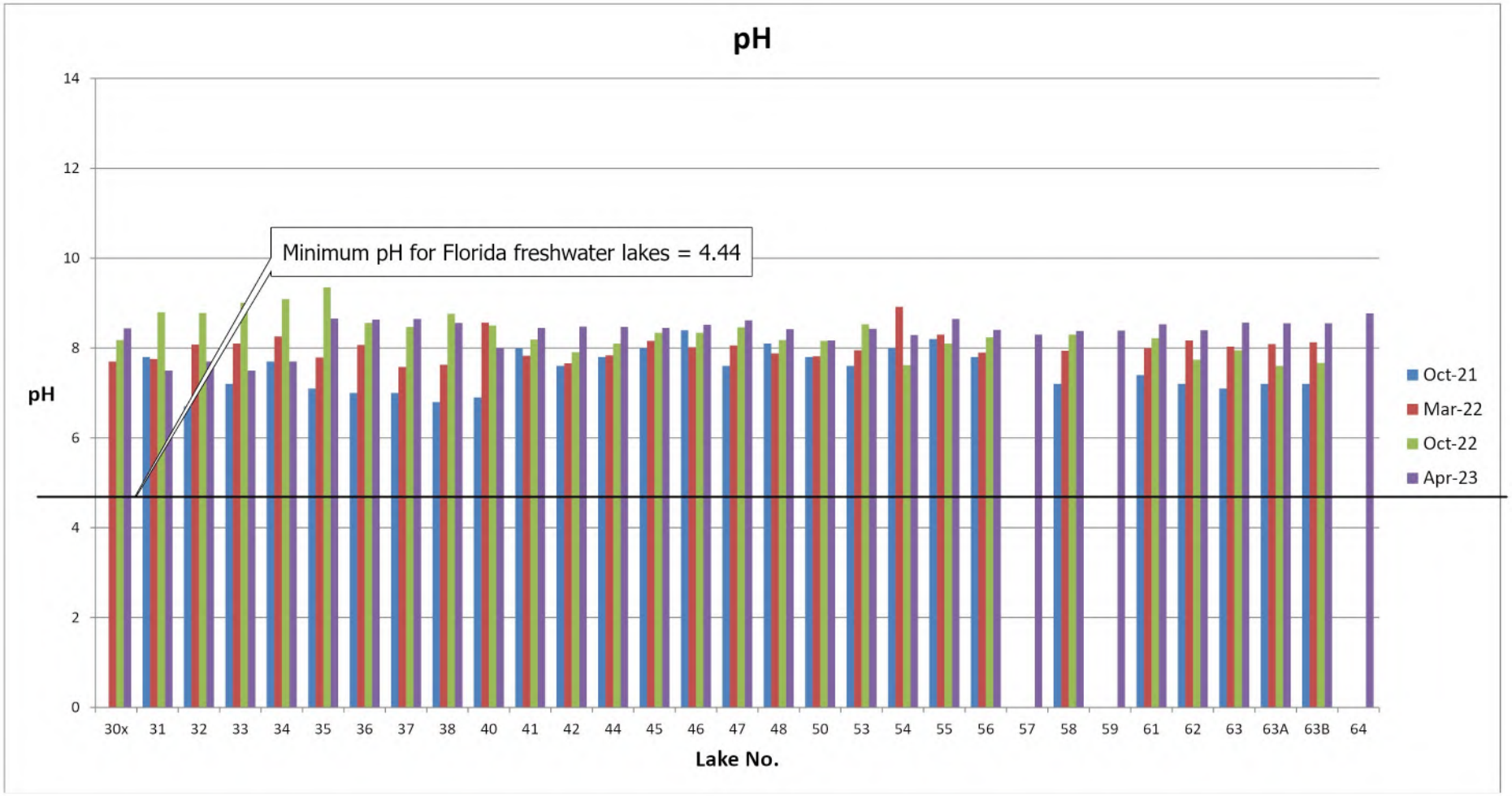

cph	Scale: N/A Date: 5/17/2023 Photo Date: N/A Project No. Q0505.2 Biologist: DL GIS: ERR	PH MEASUREMENTS OCT 2021 - APR 2023 THE QUARRY CDD SECTIONS 13, 14, 23, AND 24, TOWNSHIP 48 SOUTH, RANGE 26 EAST COLLIER COUNTY, FLORIDA	FIGURE 4

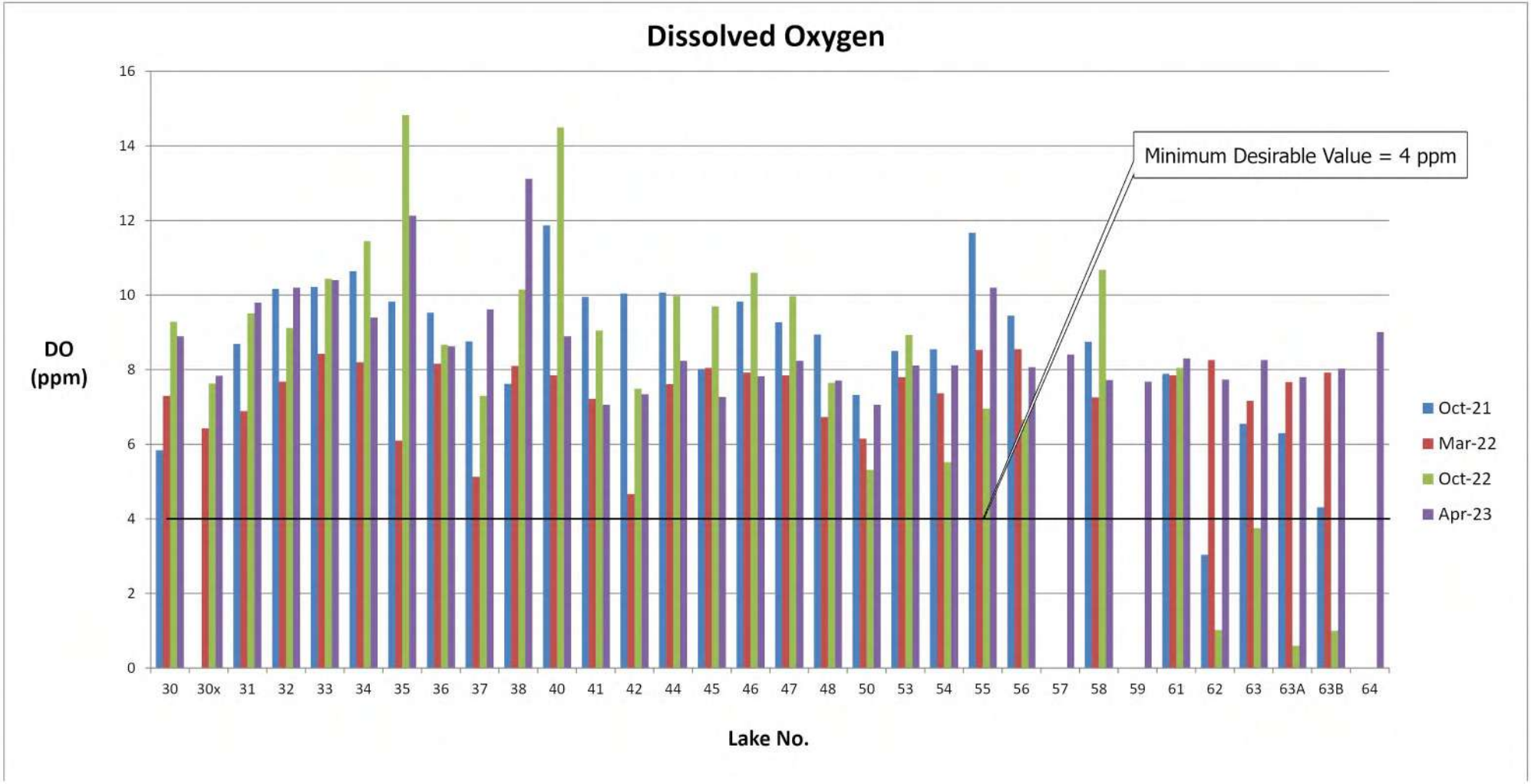

cph	Scale: N/A Date: 5/17/2023 Photo Date: N/A Project No. Q0505.2 Biologist: DL GIS: ERR	DISSOLVED OXYGEN MEASUREMENTS OCT 2021 - APR 2023 THE QUARRY CDD SECTIONS 13, 14, 23, AND 24, TOWNSHIP 48 SOUTH, RANGE 26 EAST COLLIER COUNTY, FLORIDA	**FIGURE 5**

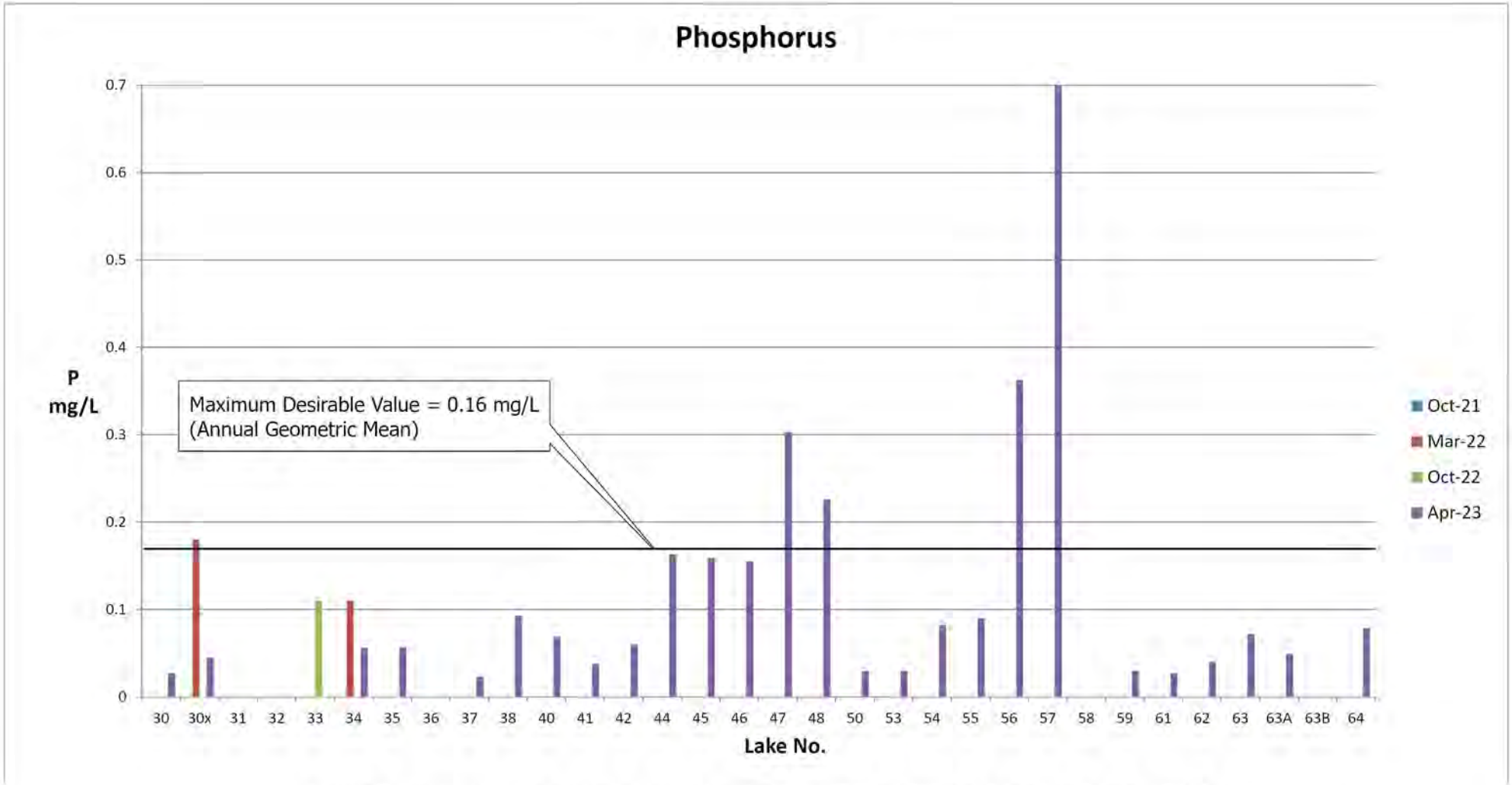

Note: Phosphorus was not detected or was below the quantification limit in all lakes in October 2021

cph	Scale: N/A Date: 5/17/2023 Photo Date: N/A Project No. Q0505.2 Biologist: DL GIS: ERR	PHOSPHORUS MEASUREMENTS OCT 2021 - APR 2023 THE QUARRY CDD SECTIONS 13, 14, 23, AND 24, TOWNSHIP 48 SOUTH, RANGE 26 EAST COLLIER COUNTY, FLORIDA	FIGURE 6

Maximum Desirable Value = 2.23mg/L
(Annual Geometric Mean)

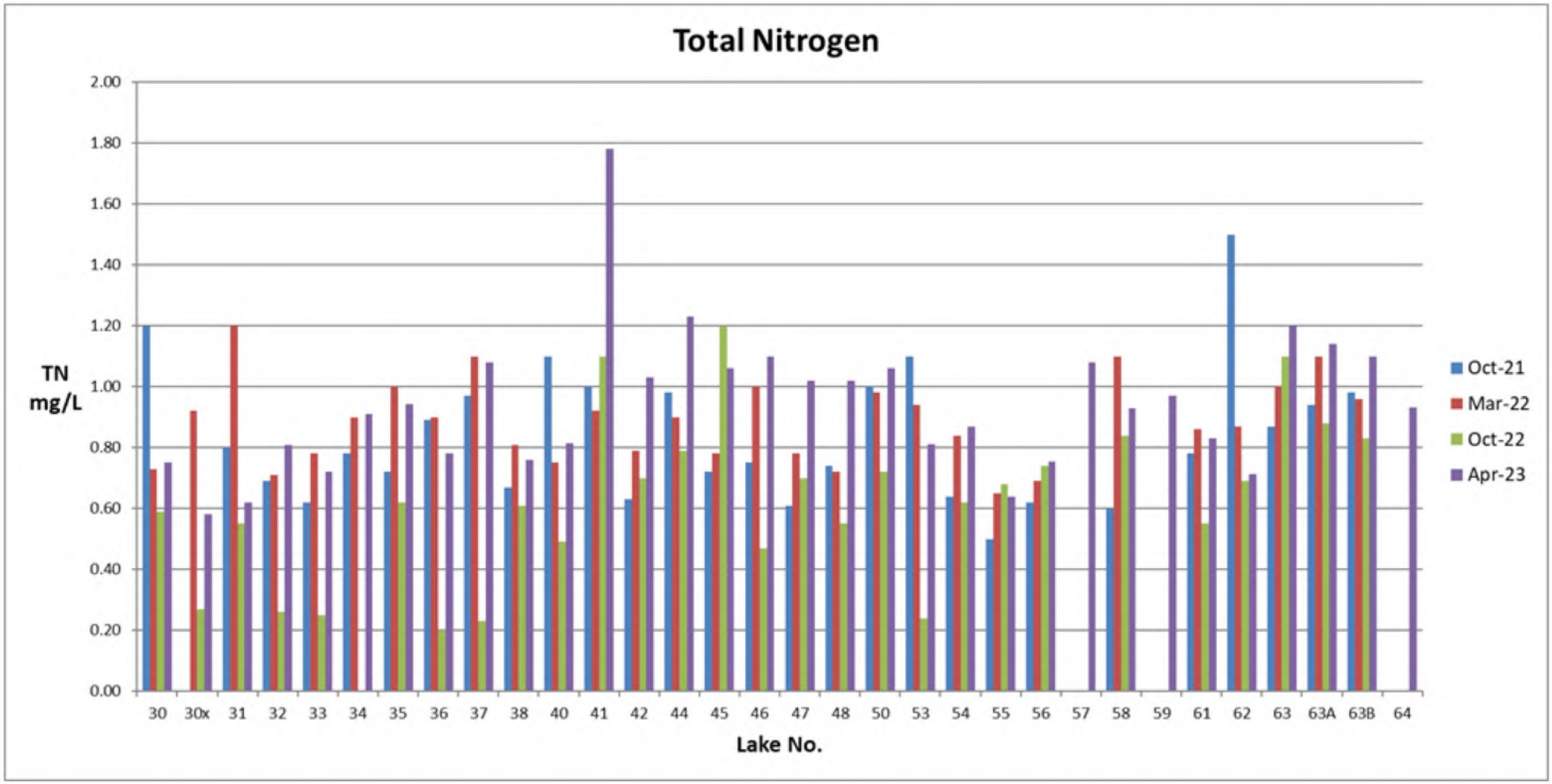

cph	Scale: N/A Date: 5/17/2023 Photo Date: N/A Project No. Q0505.2 Biologist: DL GIS: ERR	TOTAL NITROGEN MEASUREMENTS OCT 2021 - APR 2023 THE QUARRY CDD SECTIONS 13, 14, 23, AND 24, TOWNSHIP 48 SOUTH, RANGE 26 EAST COLLIER COUNTY, FLORIDA	FIGURE 7

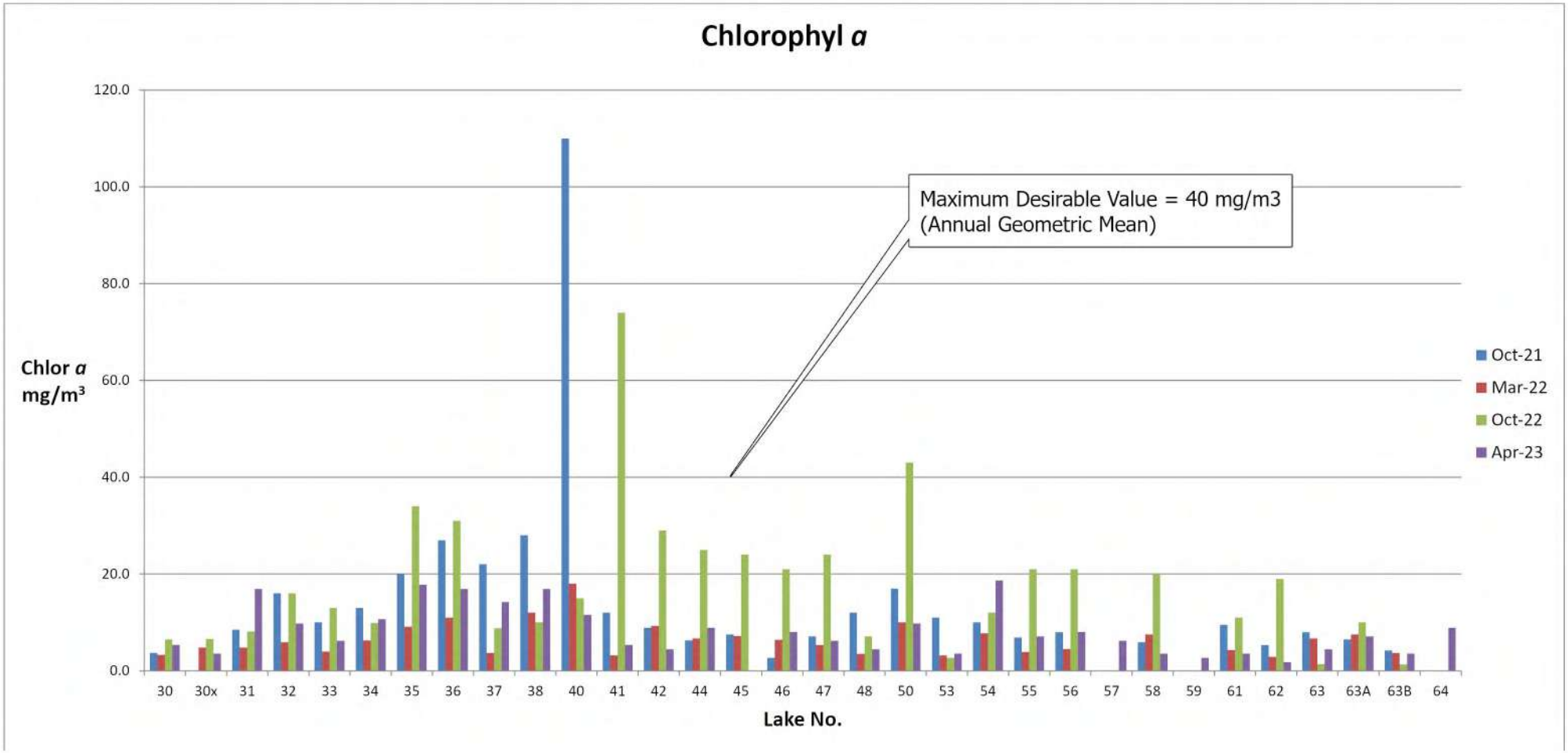

cph	Scale: N/A Date: 5/17/2023 Photo Date: N/A Project No. Q0505.2 Biologist: DL GIS: ERR	CHLOROPHYLL A MEASUREMENTS OCT 2021 - APR 2023 THE QUARRY CDD SECTIONS 13, 14, 23, AND 24, TOWNSHIP 48 SOUTH, RANGE 26 EAST COLLIER COUNTY, FLORIDA	FIGURE 8

Normal Range = 0 - 0.5 ppt

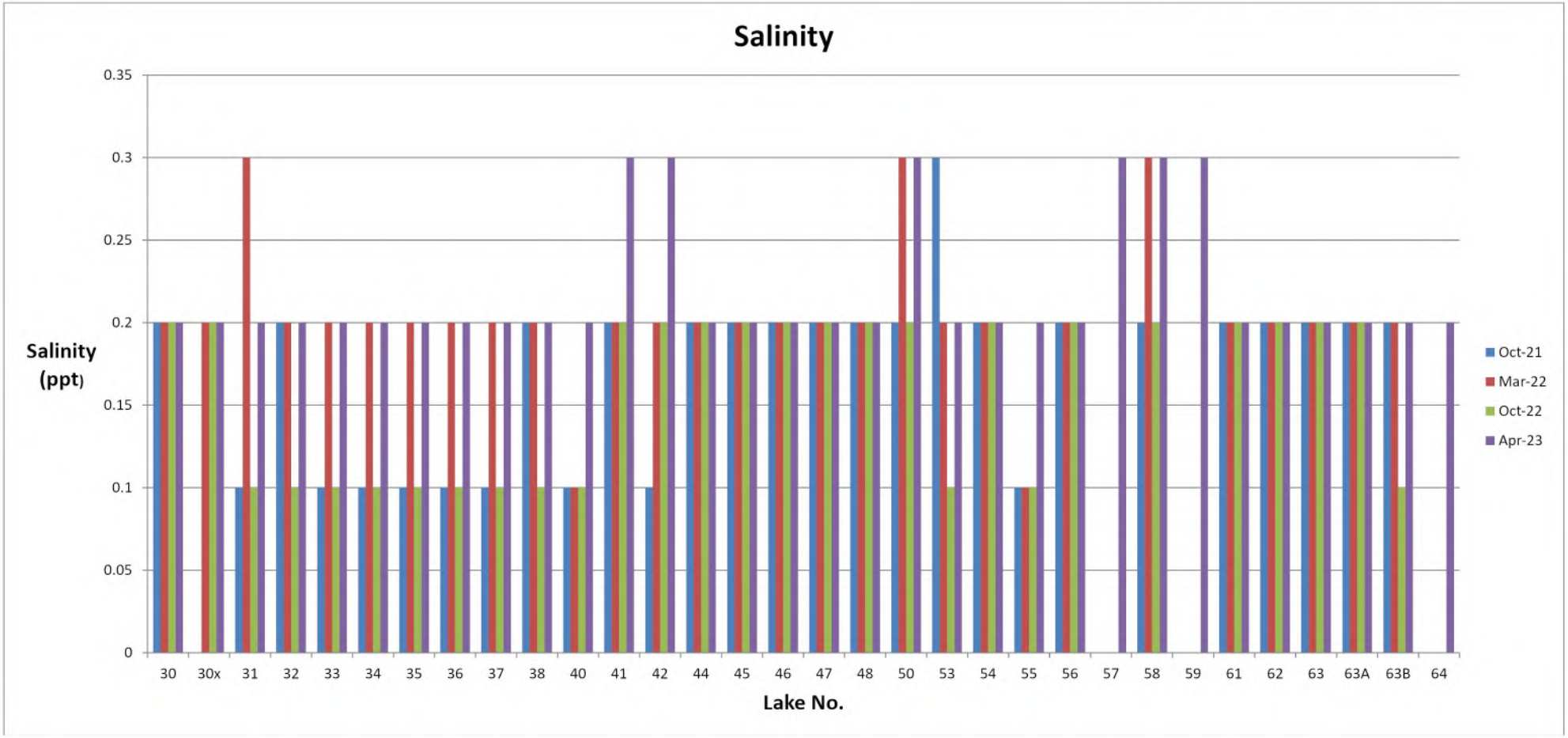

cph	Scale: N/A Date: 5/17/2023 Photo Date: N/A Project No. Q0505.2 Biologist: DL GIS: ERR	SALINITY MEASUREMENTS OCT 2021 - APR 2023 THE QUARRY CDD SECTIONS 13, 14, 23, AND 24, TOWNSHIP 48 SOUTH, RANGE 26 EAST COLLIER COUNTY, FLORIDA	FIGURE 9

Maximum Desirable Value = 1,275 uS/cm

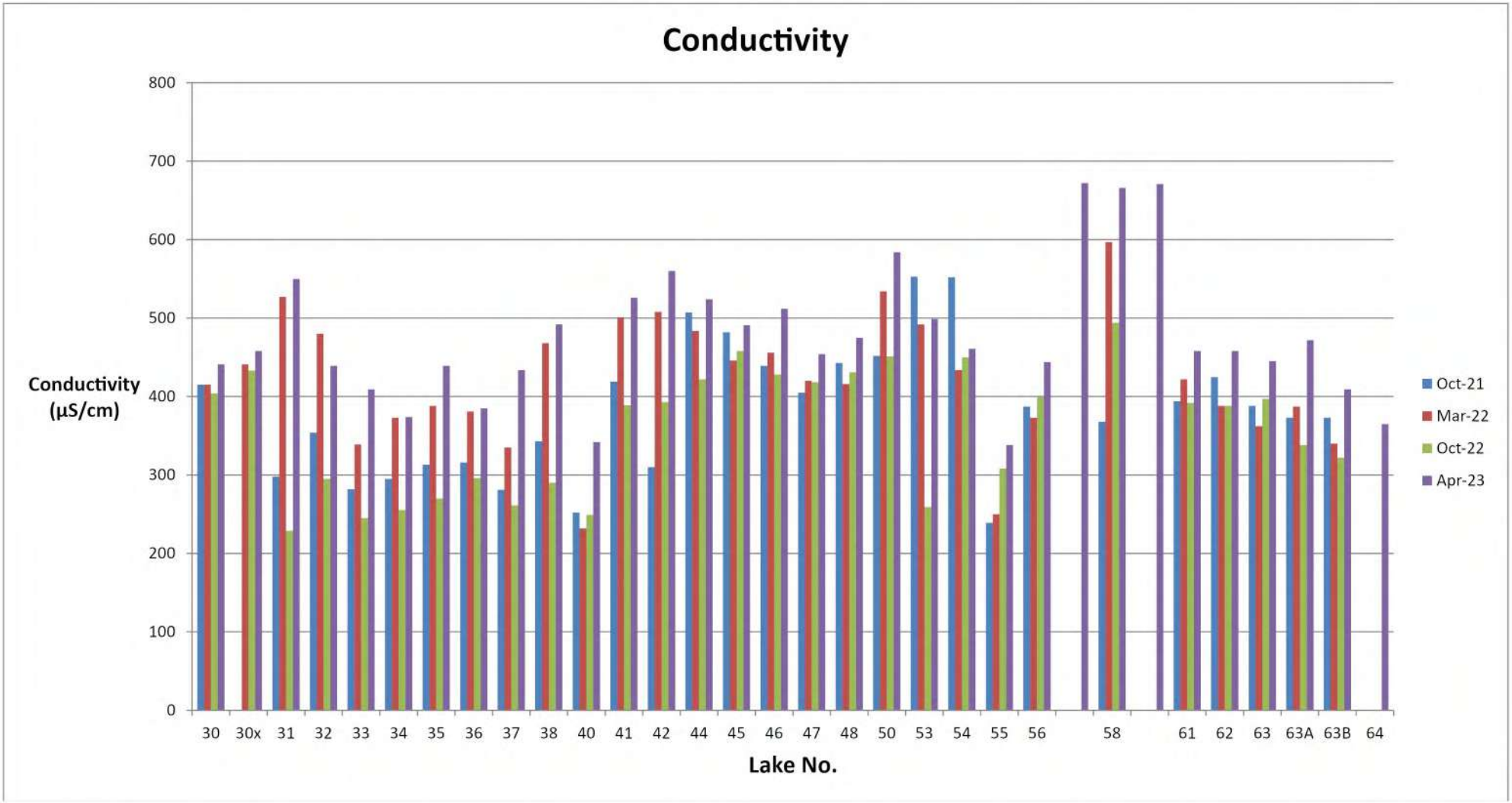

cph	Scale: N/A Date: 5/17/2023 Photo Date: N/A Project No. Q0505.2 Biologist: DL GIS: ERR	CONDUCTIVITY MEASUREMENTS OCT 2021 - APR 2023 THE QUARRY CDD SECTIONS 13, 14, 23, AND 24, TOWNSHIP 48 SOUTH, RANGE 26 EAST COLLIER COUNTY, FLORIDA	FIGURE 10

APPENDIX B

Photographs of Sampling Locations

The Quarry CDD
May 2023
Water Quality Monitoring Report
Collier County, Florida

Lake 30

Lake 30

Lake 31

Lake 32

Lake 33

Lake 34

Lake 35

Lake 36

cph	Date: 5/17/2023 Photo Date: March 2023 Project No. Q0505.2 Biologist: DL GIS: ERR	PHOTOGRAPHS THE QUARRY CDD SECTIONS 13, 14, 23, AND 24, TOWNSHIP 48 SOUTH, RANGE 26 EAST COLLIER COUNTY, FLORIDA	**APPENDIX C-1**

Lake 37

Lake 38

Lake 40

Lake 41

Lake 42

Lake 44

Lake 45

Lake 46

cph	Date: 5/17/2023 Photo Date: March 2023 Project No. Q0505.2 Biologist: DL GIS: ERR	PHOTOGRAPHS THE QUARRY CDD SECTIONS 13, 14, 23, AND 24, TOWNSHIP 48 SOUTH, RANGE 26 EAST COLLIER COUNTY, FLORIDA	**APPENDIX C-2**

Lake 47

Lake 48

Lake 50

Lake 53

Lake 54

Lake 55

Lake 56

Lake 57

cph	Date: 5/17/2023 Photo Date: March 2023 Project No. Q0505.2 Biologist: DL GIS: ERR	PHOTOGRAPHS THE QUARRY CDD SECTIONS 13, 14, 23, AND 24, TOWNSHIP 48 SOUTH, RANGE 26 EAST COLLIER COUNTY, FLORIDA	**APPENDIX C-3**

Lake 58

Lake 59

Lake 61

Lake 62

Lake 63

Lake 63A

Lake 63B

Lake 64

cph	Date: 5/17/2023 Photo Date: March 2023 Project No. Q0505.2 Biologist: DL GIS: ERR	PHOTOGRAPHS THE QUARRY CDD SECTIONS 13, 14, 23, AND 24, TOWNSHIP 48 SOUTH, RANGE 26 EAST COLLIER COUNTY, FLORIDA	**APPENDIX C-4**

5B

FIELD OBSERVATION REPORT

Project Name	2022 Shoreline Phase IIB	Dates	05/8/2023 – 05/12/2023
Owner	Quarry CDD	Time/Weather	Sunny/Partly Cloudy/Rainy
CPH No.	Q0513	Inspector	Dimitrios Lambros

Personnel and Equipment on Site			
Contractor	Glase Golf LLC		
Subcontractor(s)			
Geotechnical Testing Lab			
Contractor Employees	1 Superintendent, 6 Operators, 6 Laborers		
Subcontractor Employees			
Equipment Active	2 – Excavators 3 – Dumpers 2 – Skid Steer	1 - Sweeper 1 - Loader 1 – Power Broom	

Work In Progress, Location, and Remarks

- SWPPP in compliance. MOT in compliance, but minimal.
- Roads open to traffic.
- Scheduled 5 days for construction observation.
- Lake 57
  - 287 LF of option 1: Fill, geotextile, rip rap
  - 230 LF of option 3 modification: Fill, coconut mesh, no litorals planted, geotextile, rip rap
- Lake 42
  - Leader drains to catch basins at 5 locations
- No accidents were reported this week.

Monday, May 8, 2023

Tuesday, May 9, 2023

Wednesday, May 10, 2023

Thursday, May 11, 2023

Friday, May 12, 2023

FIELD OBSERVATION REPORT

Project Name.	2022 Shoreline Phase IIB	**Dates**	05.22 to 05.26.23
Owner	Quarry CDD	**Time/Weather**	Sunny/Partly Cloudy/Rainy
CPH No.	Q0513	**Inspector**	Dimitrios Lambros

Personnel and Equipment on Site			
Contractor	Glase Golf LLC		
Subcontractor(s)			
Geotechnical Testing Lab			
Contractor Employees	1 Superintendent, 2 Operators, 9 Laborers		
Subcontractor Employees			
Equipment Active	2 – Excavators 3 - Buggies 2 – Skid Steer	1 - Sweeper 1 -Front end Loader	

Work In Progress, Location, and Remarks
• SWPPP in compliance.
• Roads open to traffic.
• MOT in compliance, but minimal

- Meet 8:00 am Monday 5.22.23, Albert, Scott, Mike and Tony from Down to Earth at Clubhouse compiled a list of sites to review.
    - Ironstone Ln, no issues littorals planted.
    - Lake 50, Hole10; extend 5 sprinkler heads for better irrigation.
    - Copper rock Ct, Lake 30; move heads to inside of burm.
    - Boat ramp between Copper canyon/Copper rock Ct; change 5 heads to Rotors.
    - Marblestone Dr, Lake 54; check for irrigation heads at house #9359 side yard.
    - Lake 55; irrigation heads are up slope, no issues.
    - Lake 56; Weatherstone Dr. no issues.
    - Shale Ct, Lake 38; need 3 heads installed to irrigate Littorals.
    - Crystal Ct Lake 38; heads are very low. They need to be upslope.
- Lake 61, Graphite Cir, leader drain lines installed to the Lake:
    - between #9096/#9100 trench excavated to lake.
    - between #9104/#9100 trench excavated to lake.
    - between #9020/#9024 trench excavated, bubble box removed piped to lake.
    - between #9036/#9028 trench excavated to lake.
    - Repairs to broken pipe/wire in trench #9036/9028 and pipe/head in trench #9020/#9024.
    - Tony from Down to Earth completed the repairs.
- Lake 61; Graphite Cir, Opt 3; 140 LF of Fill dirt and 8' of coconut blanket on North shore, 90 LF at south shore.
- Lake 62; Limestone Ln, Opt 3; 62 LF, Fill dirt and 8' coconut blanket.
- **Thompson Underwater Contractors on site** and located the 4-48" outflows at easement.
- Clase Golf LLC crew jumped in and hand dug irrigation lines/heads;
    - Lake 48, Nickle Ridge; several marked heads on south/east relocated/installed for proper irrigation of Littorals.
    - Lake 46; several marked heads around lake relocated/installed for proper irrigation of Littorals.
    - Lake 50, Quarry Dr; four heads relocated/installed for proper irrigation of Littorals.
    - Lake 54; Marblestone Dr; 3 heads relocated/installed.
    - Lake 55; Marblestone Dr, 2 heads relocated/installed.
    - Lake 56; Marblestone Dr, 3 heads relocated/installed.
    - Lake 32; Quartz Ln, 1 head relocated/installed.
- Lake 30; Hideaway Harbor Ct, excavated trenches for 5 heads.
- Lake 63; Siesta Bay Dr; Opt 3, 357 LF, Fill dirt and 8' width of coconut blanket, rip rap around outfalls.
- Lake 45; between #9681/#9685 Cobalt Cir, trench drain to lake.
    - Bubble box removed, drain pipe added to lake.
- Lake 58; #9230 Gypsum Way, trench drain to lake.
    - Bubble box removed, drain pipe added to lake.
- Lake 57; Ores Cir, Opt 3; 145 LF, Fill dirt and 8' width of coconut blanket.

Monday, May 22, 2023, Ironstone Ln

Tuesday, May 23, 2023, #9096 and #9100, Graphite Cir, Lake 61.

Wednesday, May 24, 2023,
Thompson Underwater Contractors at Outflow easement

Wednesday, May,24, 2023, Outflow easement, cleaning 1 of 4 - 48” outfalls headwall,
Lake 30 Shore Lake easement.

Wednesday, May 24, 2023, Lake 48, Nickle Ridge Cir.

Thursday, May 25, 2023, Lake 50, Hole 10
4 heads moved

Friday, May 26, 2023, #9681/#9685 Cobalt Cir, bubble box removed drainpipe added to lake

Friday, May 26, 2023, Gypsum Way lake 58, downspout washout

Friday, May 26, 2023, Gypsum Way, Lake 57
bubble box removed. Gutter leader piped to lake.

Siesta Bay Lake 63, opt 3, rip rap around out falls.

Friday, May 26, 2023, Lake 57, Ores Cir
Opt 3, 145 LF

Friday, May 26, 2023, Hideaway Harbor Ct; lines and heads added

FIELD OBSERVATION REPORT

Project Name.	2022 Shoreline Phase IIB	Dates	05.29 to 06.02.23
Owner	Quarry CDD	Time/Weather	Sunny/Partly Cloudy/Rainy
CPH No.	Q0513	Inspector	Dimitrios Lambros

Personnel and Equipment on Site			
Contractor	Glase Golf LLC		
Subcontractor(s)			
Geotechnical Testing Lab			
Contractor Employees	1 Superintendent, 6 Operators, 6 Laborers		
Subcontractor Employees			
Equipment Active	2 – Excavators 3 - Buggies 2 – Skid Steer	1 - Sweeper 1 -Front end Loader	

Work In Progress, Location, and Remarks
• SWPPP in compliance.
• Roads open to traffic.
• MOT in compliance, but minimal

- Memorial Day, no work
- Shale Ct, Lake 36; 8 irrigation lines and sprinkler heads installed for Littoral irrigation.
    - Turbidity barrier placed.
    - Washout behind #9170 Shale Ct; filled, trench to lake and placed drainage pipe.
    - Washout behind #9162 Shale; filled, trench between #9162/#9166, 4” to 8” drain to lake.
    - Washout behind #9180 Quartz Ln filled, trench between #9180/#9176 and behind #9176 catch basin placed, piped 4” to 8” drainage to lake.
    - Fill dirt placed in washout.
- Quarry Dr, Lake 63 A; Opt 3; 312 LF, fill dirt compacted and 8’ of coconut blanket placed.
- Ironstone Ln, Lake #42; Turbidity barrier placed.
    - Hand trench between #9545/#9541 Ironstone and placed drain pipe to lake. Option 2, 60 LF between #9541/9545.
    - Hand trench between #9537/#9533 Ironstone and placed drain pipe to lake.
    - Opt 2, 60 LF between #9537/#9533.
    - Hand trench betweeen #9533/# 9529 Ironstone and paced drain pipe to lake.
    - Opt 2, 60 LF between #9533/#9529.
    - Hand trench between #9525/#9521 Ironstone and placed drain pipe to lake.
    - Opt 2, 60 LF between #9525/#952.
- Siesta Bay #9060 hand trench leaders, pipe to lake 63.
    - #9064/#9060; hand trench 4 irrigation lines and heads for Littoral irrigation.

Tuesday, May 30, 2023, Ironstone Ln #9545/#9541

Tuesday, May 30, 2023, Shale Ct. irrigation

Tuesday, May 30, 2023, Quarry Dr., Lake 36a

Wednesday, May 31, 2023, Shale Ct.
#9166/#9162

Wednesday, May 31, 2023, Washout #9170 Shale Ct.

Thursday, June 1, 2023, washout #9180, #9176 Quartz Ln.

Thursday, June 1, 2023, #9180 and #9176 Quartz Ln

Friday, June 2, 2023, Ironstone Ln #9525/#9521
trench to lake

Friday, June 2, 2023, Siesta Bay # 9060/#9064
leaders to lake 36

FIELD OBSERVATION REPORT

Project Name.	2022 Shoreline Phase IIB	Dates	06.05 to 06.09.23
Owner	Quarry CDD	Time/Weather	Sunny/Partly Cloudy/Rainy
CPH No.	Q0513	Inspector	Dimitrios Lambros

Personnel and Equipment on Site			
Contractor	Glase Golf LLC		
Subcontractor(s)			
Geotechnical Testing Lab			
Contractor Employees	1 Superintendent, 6 Operators, 6 Laborers		
Subcontractor Employees			
Equipment Active	2 – Excavators 3 - Buggies 1 – Skid Steer 1 - Sweeper 1 -Front end Loader		

Work In Progress, Location, and Remarks
• SWPPP in compliance.
• Roads open to traffic.
• MOT in compliance, but minimal

- Ironstone Ln, Lake #42, between #9509/#9505 hand trench and drain to lake, opt 2 between #9509/#9505 to round bend in lake
- Gypsum Way, Lake ; between #9230/#9236 repair washout again from heavy weekend rains. As per Albert Marafi/Rip rap placed 10' to each side of wash out area.
- Limestone Ln, Lake 59; between #9154/9150, hand trench 4' - 8'' drain to Lake. As per Albert Marafi/rip rap placed 10' to each side of drain in wash out area.
- Limestone Ln, Lake 59, hole #7; Littorals planted.
- Universal Testing tech (Patrick) onsite; Protor taken last week from fill pile in the staging area; Rip rap samples taken today from staging area; compaction tests taken at 6 sites, Lake 61 Lake 62, Lake 36, Lake 36a, Lake 56 and Lake 45.
- Quartz Ln, Lake 36, between #9180/9176 repair washout again from heavy weekend rains. As per Albert, rip rap placed in wash out from grassline to shoreline. Basin area re contoured and sod placed to rip rap.
- Shale Ct, between #9166/#9162, repair previously repaired (5/31) washout, fill dirt placed into washout and compacted. Fresh coconut blanket placed.
- Limestone Ln; between #9130/9134 outside Lanai (9134) screen door, removed old sod and replaced with new sod. I walked/inspected the site with Scott.
- As per Albert, I asked Scott on future leader to lake drain installs, to knock on owner doors before starting, also asked Scott to place a silt fence at dirt pile in the staging area.
- Graphite Cir; between #9036/#9028 repair washout and remove old sod/replace with new sod.
    - #9104/#9100 remove old sod/replace with new.
    - #9020/#9024 repair washout and remove old sod/replace with new sod.
- Coastline Ct; Lk 30, Turbidity curtain placed, Opt 3, 150 LF. 28 LF of rip rap from grass line to shoreline on south where washout occuring between bldgs #8779/#8775.
- Crystal Ct; between #9121/#9131, trench to drain leaders to lake, 4" to 8".
- Power sweep Coastal Ct, Quarry Dr and Ped walk at the staging area.

Monday, June 5, 2023
Ironstone Ln, #9509/#9505

Monday, June 5, 2023
Gypsum Way #9230/#9236 rip rap

Monday, June 5, 2023
Limestone Ln, #9154 and #9150 rip rap at washout

Tuesday, June 6, 2023
Littorals Lake 59, Hole 7

Tuesday, June 6, 2023
Limestone Ln; #9134

Tuesday, June 6, 2023.
Shale Ct, repair

Tuesday, June 6, 2023.
Universal Testing Compaction Test
Lake 61

Tuesday, June 6, 2023
Universal Testing Compaction Test
Lake 45

Wednesday, June 7, 2023
Quartz Ln #9180 rip rap and Shale Ct, #9166/#9162 repair.

Thursday, June 8, 2023
Graphite Cir; #9036/#9028

Thursday, June 8, 2023
Graphite Cir; #9104/9100

Thursday, June 8, 2023
Graphite Cir; #9020/#9024

Friday June 8, 2023
Coastal Ct; Lk 30

Friday June 9, 2023
Crystal Ct; #9121/#9131

5D

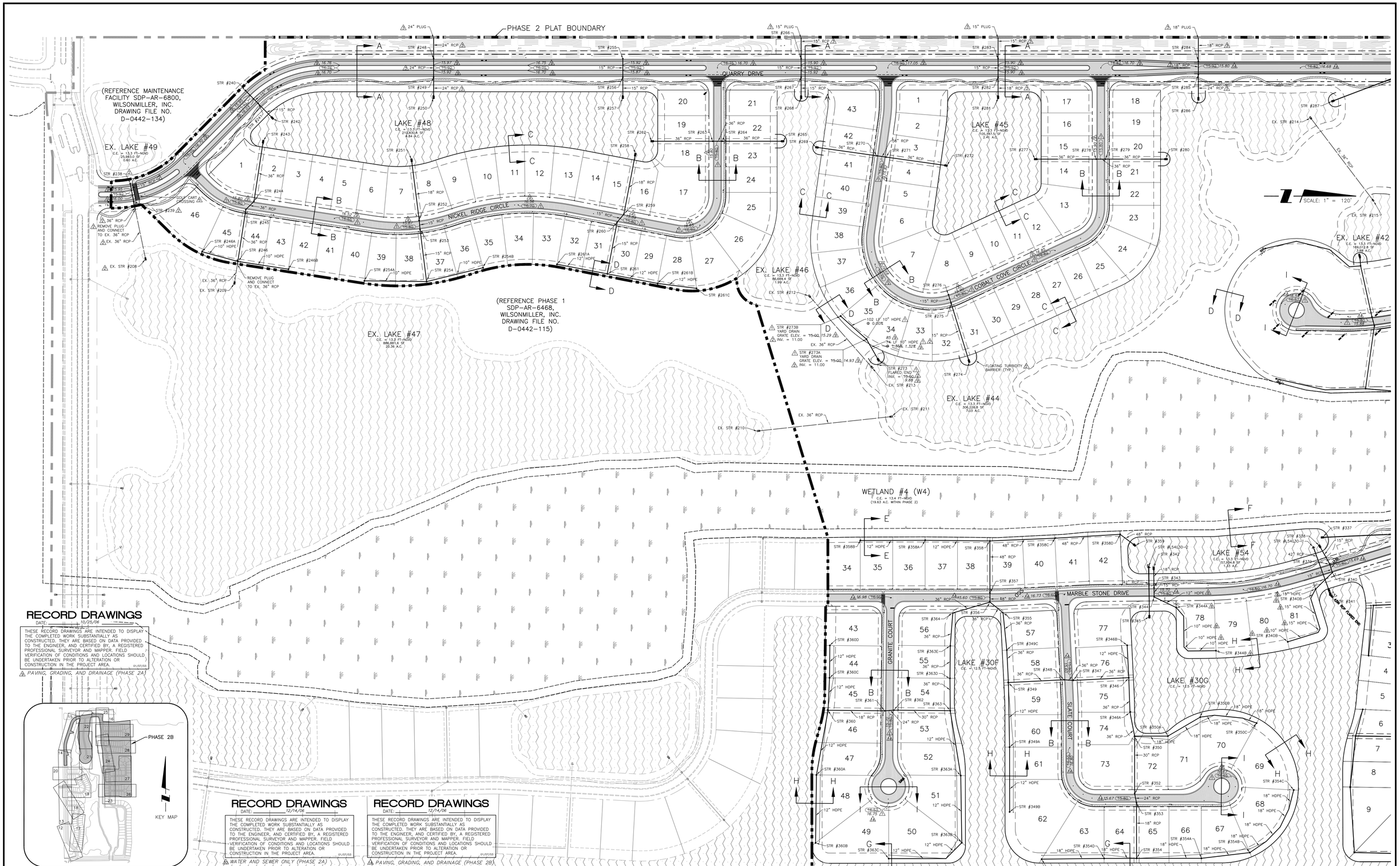

RECORD DRAWINGS

DATE: 10/25/06

THESE RECORD DRAWINGS ARE INTENDED TO DISPLAY THE COMPLETED WORK SUBSTANTIALLY AS CONSTRUCTED. THEY ARE BASED ON DATA PROVIDED TO THE ENGINEER, AND CERTIFIED BY, A REGISTERED PROFESSIONAL SURVEYOR AND MAPPER. FIELD VERIFICATION OF CONDITIONS AND LOCATIONS SHOULD BE UNDERTAKEN PRIOR TO ALTERATION OR CONSTRUCTION IN THE PROJECT AREA. 01/07/03

PAVING, GRADING, AND DRAINAGE (PHASE 2A)

RECORD DRAWINGS

DATE: 12/14/06

THESE RECORD DRAWINGS ARE INTENDED TO DISPLAY THE COMPLETED WORK SUBSTANTIALLY AS CONSTRUCTED. THEY ARE BASED ON DATA PROVIDED TO THE ENGINEER, AND CERTIFIED BY, A REGISTERED PROFESSIONAL SURVEYOR AND MAPPER. FIELD VERIFICATION OF CONDITIONS AND LOCATIONS SHOULD BE UNDERTAKEN PRIOR TO ALTERATION OR CONSTRUCTION IN THE PROJECT AREA. 01/07/03

WATER AND SEWER ONLY (PHASE 2A)

RECORD DRAWINGS

DATE: 12/14/06

THESE RECORD DRAWINGS ARE INTENDED TO DISPLAY THE COMPLETED WORK SUBSTANTIALLY AS CONSTRUCTED. THEY ARE BASED ON DATA PROVIDED TO THE ENGINEER, AND CERTIFIED BY, A REGISTERED PROFESSIONAL SURVEYOR AND MAPPER. FIELD VERIFICATION OF CONDITIONS AND LOCATIONS SHOULD BE UNDERTAKEN PRIOR TO ALTERATION OR CONSTRUCTION IN THE PROJECT AREA. 01/07/03

PAVING, GRADING, AND DRAINAGE (PHASE 2B)

14	RECORD DRAWING REVISION – PAVING, GRADING, AND DRAINAGE – PHASE 2B	12/14/06	MPO/2348
10	REVISED FOR UTILITIES CONVEYANCE	12/14/06	MPO/2348
9	RECORD DRAWING REVISION – PAVING, GRADING, AND DRAINAGE – PHASE 2A	10/25/06	MPO/2348
8	REVISED STORM DRAINS PER CLIENT AND ENGINEER	10/5/06	RRM/1482
5	REVISED PER ENGINEER & OWNER	6/3/06	RRM/1482
4	REVISED FOR INSUBSTANTIAL CHANGE	5/4/06	RRM/1482
3	REVISED PER FDEP COMMENTS AND PER ENGINEER	3/22/06	RRM/1482
2	REVISED PER ENGINEER & COUNTY COMMENTS	11/29/05	RRM/1482
1	REVISED PER COLLIER COUNTY COMMENTS	9/28/05	RRM/1482

REV NO.	Apr 26, 2007	REVISION	1:54:10	M:\CLEAR\YX:\ENG\N0442\150-Quarry Phase 2\Rev13 Rcrd -Asbuilt All - Phase 2B\044215004.dwg	DATE	DRAWN BY / EMP. NO.	CHECKED BY / EMP. NO.

ACTIVITY	INITIALS/EMP. NO.	DATE
DESIGNED BY:	LMG/894	4/15/05
DRAWN BY:	RRM/1482	4/15/05
CHECKED BY:		
CONTRACT ADMIN. BY:		
WM APPROVED BY:		

WilsonMiller

Planners - Engineers - Ecologists - Surveyors - Landscape Architects - Transportation Consultants

WilsonMiller, Inc.

Naples - Fort Myers - Sarasota - Bradenton - Tampa - Tallahassee

4571 Colonial Boulevard, Suite 100 - Fort Myers, Florida 33912 - Phone 239-939-1020 - Fax 239-939-3412 - Web-Site www.wilsonmiller.com

WilsonMiller, Inc. - FL Lic # LC-0000170
WilsonMiller, Inc. - Certificate of Authorization #43

CLIENT: CENTEX HOMES

PROJECT: THE QUARRY PHASE 2

DATE: FEB 2005
HORIZONTAL SCALE: 1" = 120'
VERTICAL SCALE: N/A
SEC: 14, 23 TWP: 48S RGE: 26E
CROSS REFERENCE FILE NO.: D-0442-48

TITLE: MASTER PAVING, GRADING & DRAINAGE PLAN (SOUTH)

PROJECT NUMBER: N0442-509-000

LISA M. GIORDANO
LICENSE # 59318

INDEX NUMBER: D-0442-150

SHEET NUMBER: 4 OF 38

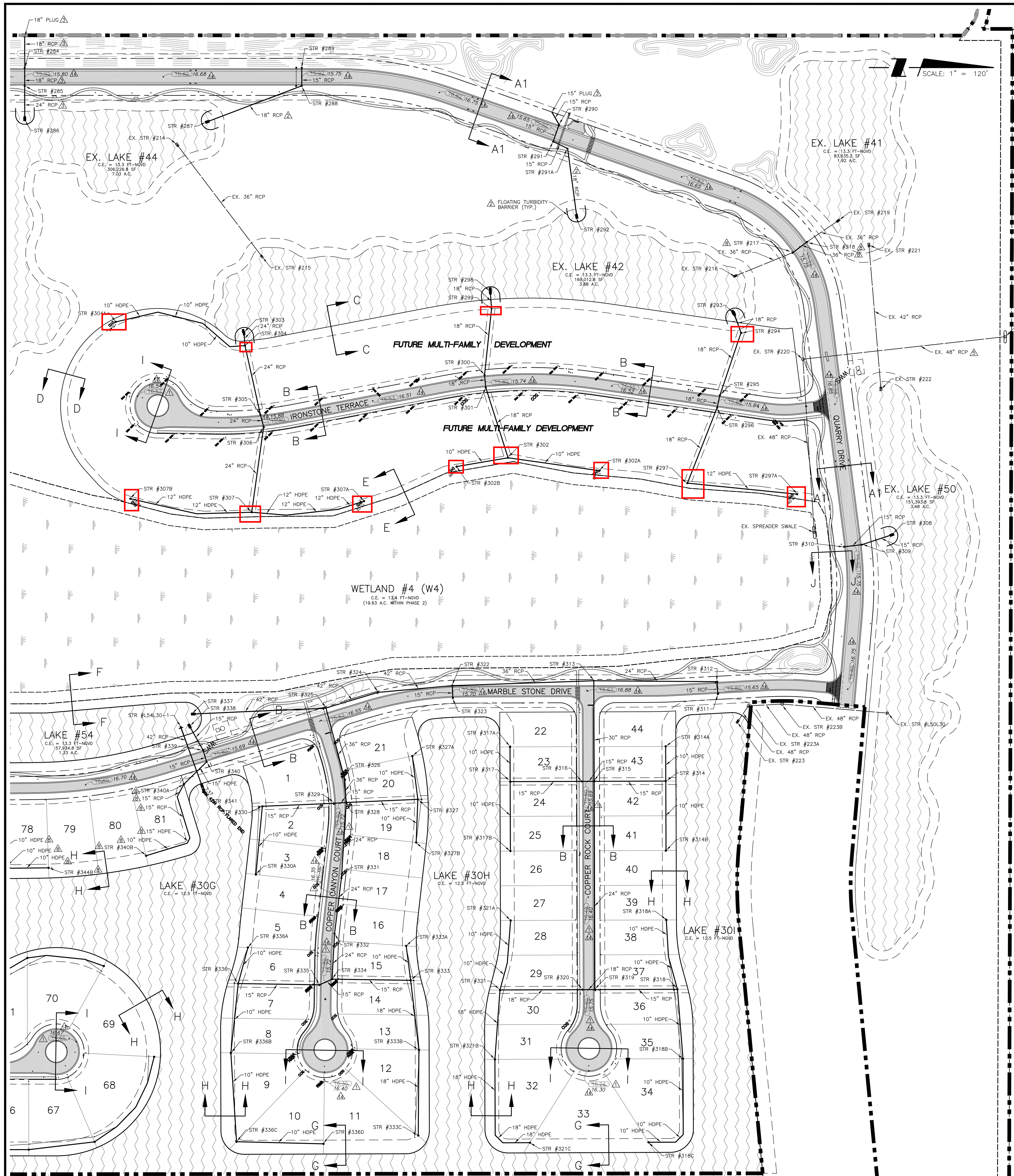

DEVELOPMENT STANDARDS

NOTE: ALL LOTS PROPOSED WITHIN PHASE 2 ARE SINGLE FAMILY DETACHED.

PER THE HERITAGE BAY PLANNED UNIT DEVELOPMENT, ORDINANCE NO. 03-40, THE MINIMUM DIMENSIONS REQUIRED FOR SINGLE FAMILY DETACHED ARE:

		SINGLE FAMILY DETACHED
MIN. LOT AREA		5,000 SQ. FT.
MIN. LOT WIDTH[5]		50 FT.
MIN. AVERAGE SITE DEPTH[9]		100 FT.
FRONT YARD[1, 7, 12] SETBACK	PRINCIPAL & ACCESSORY	20 FT.
	GARAGE FRONT/ SIDE ENTRY	23 FT./10 FT.
	GARAGE OR CARPORT ON PARKING LOT ACCESSWAY	N/A
REAR YARD SETBACK[6, 7]	PRINCIPAL	10 FT.
	ACCESSORY [2, 10, 11, 12]	5 FT.
SIDE YARD SETBACK PRINCIPAL & ACCESSORY [2, 4, 7, 8, 10, 11, 12]		6 FT.
PRESERVE SETBACK	PRINCIPAL	25 FT.
	ACCESSORY	10 FT.
MAX. HEIGHT[3]		35 FT.
DISTANCE BETWEEN PRINCIPAL STRUCTURES		10 FT.
MIN. FLOOR AREA		1,000 SQ. FT.

NOTES:

1. FRONT YARDS FOR DWELLINGS AND SIDE-ENTRY GARAGES ARE MEASURED FROM BACK OF CURB OR EDGE OF PAVEMENT (IF NOT CURBED). FRONT YARDS FOR A FRONT LOADED GARAGE ARE MEASURED FROM GARAGE DOOR TO BACK OF CURB, EDGE OF PAVEMENT OR SIDEWALK, WHICHEVER IS CLOSER TO THE GARAGE DOOR.
2. WHERE ADJACENT TO A GOLF COURSE, LAKE (MEASURED FROM TOP OF BANK), OR OPEN SPACE REDUCED TO 0 FEET.
3. BUILDING HEIGHT – SEE SECTION 1.8.
4. ALL ZERO LOT LINE UNITS IN A SERIES SHALL HAVE THE 0-FOOT SIDE SETBACK ON THE SAME SIDE OF THE LOT. THE ZERO FOOT SETBACK SIDE MAY CHANGE ONLY IF A MINIMUM 10 FOOT WIDE SPACE IS PROVIDED IN THE FORM OF AN EASEMENT, GOLF COURSE CROSSING, OR THE LIKE, WHICH SEPARATE THE LOTS.
5. MINIMUM LOT WIDTH MAY BE REDUCED BY 29% FOR CUL-DE-SAC LOTS PROVIDED MINIMUM LOT AREA REQUIREMENTS ARE MET.
6. FOR ANY LOT SERVED BOTH BY A STREET AND AN ALLEY, THE LOT LINE ADJACENT TO THE ALLEY SHALL BE TREATED AS A REAR LOT LINE AND THE SETBACK SHALL BE MEASURED FROM THE EDGE OF PAVEMENT.
7. GUESTHOUSES OR CABANA BEDROOMS ARE SUBJECT TO THE SETBACK REQUIREMENTS FOR PRINCIPAL STRUCTURES.
8. THE SIDE CORNER SETBACK SHALL BE THE SAME AS THE REQUIRED SIDE PRINCIPAL STRUCTURE SETBACK.
9. SITE DEPTH AVERAGE-DETERMINED BY DIVIDING THE SITE AREA BY THE SITE WIDTH.
10. ACCESSORY POOL ENCLOSURE/SCREEN LANAI SETBACK MAY BE REDUCED TO 0 FEET WHEN ATTACHED TO COMMON PRIVACY WALL.
11. ACCESSORY POOL ENCLOSURE/SCREEN LANAI SETBACK FROM LAKE MAINTENANCE EASEMENT MAY BE REDUCED TO 0 FEET.
12. COMMON ARCHITECTURAL FEATURES SUCH ARCHWAYS, ARBORS, AND COURTYARD ENTRY FEATURES SHALL BE EXEMPT FROM THE MINIMUM YARD REQUIREMENTS LISTED ABOVE.
13. FOR THE PURPOSE OF TABLE 2, THE TERM "MULTI-FAMILY BUILDING" INCLUDES ASSISTED LIVING FACILITIES.

GENERAL NOTES:

1.) ELEVATIONS ARE BASED ON NATIONAL GEODETIC VERTICAL DATUM (NGVD).

2.) A PRECONSTRUCTION MEETING SHALL TAKE PLACE WITH COLLIER COUNTY ENGINEERING SERVICES PRIOR TO THE START OF CONSTRUCTION.

3.) THIS PLAN WAS BASED ON FIELD INFORMATION AND AVAILABLE RECORD DRAWING INFORMATION. IT IS THE CONTRACTOR'S RESPONSIBILITY TO DETERMINE THE EXACT LOCATION OF EXISTING INFRASTRUCTURE PRIOR TO CONSTRUCTION AND PROVIDE (IN WRITING) ANY DISCREPANCIES TO THE ENGINEER.

4.) THIS PLAN IS NOT INTENDED TO BE ALL INCLUSIVE OF EXISTING FACILITIES OR MATERIALS TO BE REMOVED. CONTRACTOR SHALL BE RESPONSIBLE FOR VERIFICATION OF EXISTING CONDITIONS WITH REGARDS TO SITE MODIFICATIONS NECESSARY TO ACCOMMODATE THE PROPOSED IMPROVEMENTS. ALL ITEMS TO BE REMOVED SHALL BECOME THE PROPERTY OF THE CONTRACTOR AND SHALL BE REMOVED AT THE EXPENSE OF THE CONTRACTOR, INCLUDING ALL DUMPING FEES, UNLESS OTHERWISE NOTED.

5.) COLLIER COUNTY PUBLIC UTILITIES, FLORIDA POWER AND LIGHT, UNITED TELEPHONE SERVICE, TECO GAS AND CATV MAY HAVE EXISTING UTILITIES ADJACENT TO THIS PROPOSED CONSTRUCTION. CONTRACTOR SHALL CONTACT THE RESPECTIVE UTILITIES TO LOCATE THEIR FACILITIES PRIOR TO COMMENCEMENT OF CONSTRUCTION.

6.) CONTRACTOR SHALL VERIFY ALL DIMENSIONS AND ELEVATIONS PRIOR TO COMMENCEMENT OF CONSTRUCTION. ANY DEVIATION IN PLAN INFORMATION SHALL BE REPORTED TO ENGINEER IMMEDIATELY.

7.) CONTRACTOR IS REQUIRED TO OBTAIN FROM THE ENGINEER WRITTEN APPROVAL FOR ANY DEVIATIONS FROM THE PLANS AND/OR SPECIFICATIONS.

8.) CONTRACTOR SHALL COMPLY WITH THE REQUIREMENTS OF THE COLLIER COUNTY GROUNDWATER PROTECTION ORDINANCE NO. 91-103, SECTION 4.10.1.1.2A.

9.) THE CONTRACTOR IS RESPONSIBLE FOR OBTAINING A DEWATERING PERMIT FROM SOUTH FLORIDA WATER MANAGEMENT DISTRICT AS REQUIRED.

10.) THE CONTRACTOR IS RESPONSIBLE FOR OBTAINING A NATIONAL POLLUTANT DISCHARGE ELIMINATION SYSTEM (NPDES) GENERAL PERMIT FROM THE UNITED STATES ENVIRONMENTAL PROTECTION AGENCY. ACCORDINGLY, THE CONTRACTOR IS ALSO RESPONSIBLE FOR CREATING, IMPLEMENTING AND MAINTAINING A STORM WATER POLLUTION PREVENTION PLAN AS PER THE REQUIREMENTS OF THE NPDES GENERAL PERMIT.

11.) CONTRACTOR SHALL BE RESPONSIBLE FOR MAINTAINING TRAFFIC AND USAGE OF THE EXISTING STREETS ADJACENT TO THE PROJECT. ALL TRAFFIC MAINTENANCE CONTROL SHALL BE IN ACCORDANCE WITH FLORIDA MANUAL OF TRAFFIC CONTROL AND SAFE PRACTICES FOR STREET CONSTRUCTION, MAINTENANCE, AND UTILITY OPERATIONS.

12.) UNDERGROUND CONTRACTOR SHALL MINIMIZE THE WORK AREA AND WIDTH OF TRENCHES TO AVOID DISTURBANCES OF NATURAL VEGETATION. SPOIL FROM TRENCHES SHALL BE PLACED ONLY ON PREVIOUSLY CLEARED AREAS OR AS DIRECTED BY THE OWNER. CONTRACTOR SHALL NOT REMOVE AND/OR DISTURB ANY TREES AND/OR SHRUBS WITHOUT PRIOR APPROVAL BY OWNER AND ANY FEDERAL, LOCAL, AND STATE PERMITS AS REQUIRED.

13.) ALL UNDERGROUND UTILITIES AND INFRASTRUCTURE LOCATED BENEATH THE STABILIZED PORTION OF THE ROAD BED SHALL BE INSTALLED PRIOR TO COMPACTION OF THE SUBGRADE OR AS OTHERWISE DIRECTED BY OWNER.

14.) THE CONTRACTOR SHALL REPAIR AND REPLACE ALL AREAS DISTURBED BY CONSTRUCTION TO EXISTING CONDITIONS.

15.) THE CONTRACTOR SHALL PROVIDE 48 HOURS WRITTEN NOTICE TO THE ENGINEER AND COLLIER COUNTY PRIOR TO THE FOLLOWING:
- A. COMMENCEMENT.
- B. CHANGES TO APPROVED SCHEDULES, SUBCONTRACTORS, OR RESIDENT SUPERINTENDENT.
- C. GENERAL.
  1. COMPACTION.
  2. TRENCH DENSITY.
  3. FINAL INSPECTIONS.
- D. OTHERS AS MAY BE REQUIRED BY OWNER, COUNTY AND ENGINEER.

16.) ALL MATERIALS AND CONSTRUCTION METHODS USED FOR THE PROPOSED IMPROVEMENTS SHALL CONFORM TO THE APPROVED TECHNICAL SPECIFICATIONS, AND ALL FEDERAL, STATE AND LOCAL REGULATIONS.

17.) DURING CONSTRUCTION, CATCH BASIN OPENINGS, WHERE APPROPRIATE, SHALL BE COVERED WITH FILTER FABRIC (MIRAFI 140N OR APPROVED EQUAL) TO PREVENT DEBRIS AND FILL FROM FALLING INTO THE INLET.

18.) PRIVATE STREETS, WATER MANAGEMENT FACILITIES, COMMON AREAS, OPEN SPACE, AND AMENITIES SHALL BE OWNED AND MAINTAINED BY PROPERTY OWNER'S ASSOCIATION, ITS SUCCESSORS AND ASSIGNS.

19.) THE REVIEW AND APPROVAL OF THESE IMPROVEMENT PLANS DOES NOT AUTHORIZE THE CONSTRUCTION OF REQUIRED IMPROVEMENTS WHICH ARE INCONSISTENT WITH EXISTING EASEMENTS OF RECORD.

20.) THE PROPERTY OWNER IS RESPONSIBLE FOR PERPETUAL MAINTENANCE OF ALL FEATURES OF THE SURFACE WATER MANAGEMENT SYSTEM AS OUTLINED BY THE DESIGN ENGINEER ON THESE DRAWINGS.

21.) THE PROPERTY OWNER IS RESPONSIBLE FOR THE REPLACEMENT OF ALL DEAD LANDSCAPE MATERIAL AND FOR THE MAINTENANCE OF THE REQUIRED IRRIGATION SYSTEM.

22.) THE CONTRACTOR SHALL BE RESPONSIBLE FOR OBTAINING COPIES OF AND COMPLYING WITH ALL PERMITS OBTAINED BY THE OWNER.

23.) CONTRACTOR SHALL BE RESPONSIBLE FOR COORDINATING WITH THE APPROPRIATE UTILITY COMPANIES FOR SERVICE CONNECTIONS FOR THE PROJECT.

LAND USE SUMMARY

	SQUARE FOOTAGE	ACREAGE	PERCENTAGE OF TOTAL AREA
IMPERVIOUS AREAS:			
* RESIDENTIAL (ROOF/DRIVEWAY)	858,000.00	19.70	9.4%
PAVEMENT & CURB	540,439.81	12.41	5.9%
SIDEWALK	83,495.21	1.92	0.9%
**FUTURE MULTI-FAMILY TRACT	238,000.00	5.46	2.6%
PERVIOUS AREAS:			
*RESIDENTIAL	1,769,907.90	40.63	19.4
LAKE	1,095,333.00	25.15	12.0%
OPEN SPACE	1,208,720.90	27.75	13.2%
GOLF COURSE (PREVIOUSLY PERMITTED)	2,195,535.70	50.40	24.1%
PRESERVE	855,050.00	19.63	9.4%
**FUTURE MULTI-FAMILY TRACT	284,844.00	6.54	3.1%
TOTAL	9,129,326.50	209.59	100%

* ASSUMED 5,500 SQ. FT. IMPERVIOUS PER SINGLE FAMILY LOT.
** ASSUMED 8,500 SQ. FT. IMPERVIOUS PER MULT-FAMILY BUILDING.

LEGEND

(symbol)	LAKE
(symbol)	PROPOSED PAVEMENT
(symbol)	CONCRETE SIDEWALK
C.E.	CONTROL ELEVATION
(symbol)	PHASE 2 PLAT BOUNDARY

DENSITY

PER SECTION 1.7 OF THE HERITAGE BAY PUD, COLLIER COUNTY ORDINANCE NO. 03-40, A MAXIMUM OF 3,450 DWELLING UNITS AND AN ASSISTED LIVING FACILITY CONTAINING UP TO 200 UNITS MAY BE BUILT ON THE HERITAGE BAY PUD'S 2,562± ACRES. THE GROSS PROJECT DENSITY WILL BE A MAXIMUM OF 1.3 UNITS PER ACRE.

⚠1 SURFACE WATER MANAGEMENT SUMMARY*

WATER MANAGEMENT PARAMETERS	B910	W4
CONTROL ELEVATION (FT-NGVD)	13.3	13.4
25-YEAR, 3-DAY RAINFALL (IN)	11.7	11.7
100-YEAR, 3-DAY RAINFALL (IN)	14.7	14.7
PEAK 25-YEAR, 3-DAY STORM STAGE (FT-NGVD)	15.6	14.9
PEAK 100-YEAR, 3-DAY ZERO DISCHARGE STORM STAGE (FT-NGVD)	16.0	15.5
FEMA ELEVATION (FT-NGVD)	ZONE X	ZONE X
MINIMUM RECOMMENDED ROAD CROWN ELEVATION (FT-NGVD)	15.6	N/A
MINIMUM RECOMMENDED FINISHED FLOOR ELEVATION (FT-NGVD)	17.1	N/A
MINIMUM RECOMMENDED TOP OF PERIMETER BERM ELEVATION (FT-NGVD)	15.6	14.9

* REFERENCE HERITAGE BAY SFWMD PERMIT NO. 11-02234-P

PRESERVE AREA SUMMARY

	AREA OF PRESERVE (AC)
W1	658.14
W2	110.18
W4	38.06
HERITAGE BAY COMMONS (W3)	54.4
HERITAGE BAY	9.5
TOTAL	870.3

NOTE: PER THE HERITAGE BAY P.U.D., A MINIMUM OF 863.0 ACRES OF PRESERVE ARE TO BE PROVIDED.

RECORD DRAWINGS

DATE: 12/14/06

THESE RECORD DRAWINGS ARE INTENDED TO DISPLAY THE COMPLETED WORK SUBSTANTIALLY AS CONSTRUCTED. THEY ARE BASED ON DATA PROVIDED TO THE ENGINEER, AND CERTIFIED BY, A REGISTERED PROFESSIONAL SURVEYOR AND MAPPER. FIELD VERIFICATION OF CONDITIONS AND LOCATIONS SHOULD BE UNDERTAKEN PRIOR TO ALTERATION OR CONSTRUCTION IN THE PROJECT AREA. 01/07/03

⚠14 *PAVING, GRADING, AND DRAINAGE (PHASE 2B)*

RECORD DRAWINGS

DATE: 12/14/06

THESE RECORD DRAWINGS ARE INTENDED TO DISPLAY THE COMPLETED WORK SUBSTANTIALLY AS CONSTRUCTED. THEY ARE BASED ON DATA PROVIDED TO THE ENGINEER, AND CERTIFIED BY, A REGISTERED PROFESSIONAL SURVEYOR AND MAPPER. FIELD VERIFICATION OF CONDITIONS AND LOCATIONS SHOULD BE UNDERTAKEN PRIOR TO ALTERATION OR CONSTRUCTION IN THE PROJECT AREA. 01/07/03

⚠10 *WATER AND SEWER ONLY (PHASE 2A)*

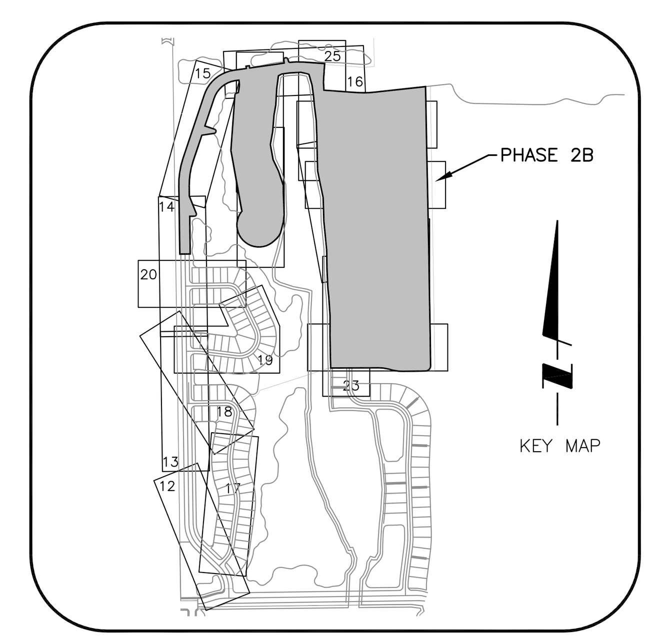

REV	REVISION	DATE	DRAWN BY / EMP. NO.	CHECKED BY / EMP. NO.
14	RECORD DRAWING REVISION – PAVING, GRADING, AND DRAINAGE – PHASE 2B	12/14/06	MPO/2348	
10	REVISED FOR UTILITIES CONVEYANCE	12/14/06	MPO/2348	
8	REVISED STORM DRAINS PER CLIENT AND ENGINEER	10/5/06	RRM/1482	
5	REVISED PER ENGINEER & OWNER	6/3/06	RRM/1482	
4	REVISED FOR INSUBSTANTIAL CHANGE	5/4/06	RRM/1482	
3	REVISED PER FDEP COMMENTS AND PER ENGINEER	3/22/06	RRM/1482	
2	REVISED PER ENGINEER & COUNTY COMMENTS	11/29/05	RRM/1482	
1	REVISED PER COLLIER COUNTY COMMENTS	9/28/05	RRM/1482	

Feb 19, 2007 - 10:26:33 RMARTENS|X:\ENG\N0442\150-Quarry Phase 2\Rev13 Rcrd Water and Sewer Phase 2B\044215005.dwg

ACTIVITY	INITIALS/EMP. NO.	DATE
DESIGNED BY:	LMG/894	4/15/05
DRAWN BY:	RRM/1482	4/14/05
CHECKED BY:		
CONTRACT ADMIN. BY:		
WM APPROVED BY:		

WilsonMiller

WilsonMiller, Inc. – FL Lic.# LC-C000170
WilsonMiller, Inc. – Certificate of Authorization #43

Planners • Engineers • Ecologists • Surveyors • Landscape Architects • Transportation Consultants

WilsonMiller, Inc.
Naples • Fort Myers • Sarasota • Bradenton • Tampa • Tallahassee
4571 Colonial Boulevard, Suite 100 • Fort Myers, Florida 33912 • Phone 239-939-1020 • Fax 239-939-3412 • Web-Site www.wilsonmiller.com

CLIENT: CENTEX HOMES

PROJECT: THE QUARRY PHASE 2

DATE: FEB 2005
HORIZONTAL SCALE: 1" = 120'
VERTICAL SCALE: N/A
SEC: TWP: RGE: 14, 23 48S 26E

TITLE: MASTER PAVING, GRADING, & DRAINAGE PLAN (NORTH)

CROSS REFERENCE FILE NO.: D-0442-48
PROJECT NUMBER: N0442-509-000

LISA M. GIORDANO
LICENSE # 59318

INDEX NUMBER: D-0442-150
SHEET NUMBER: 5 OF 38

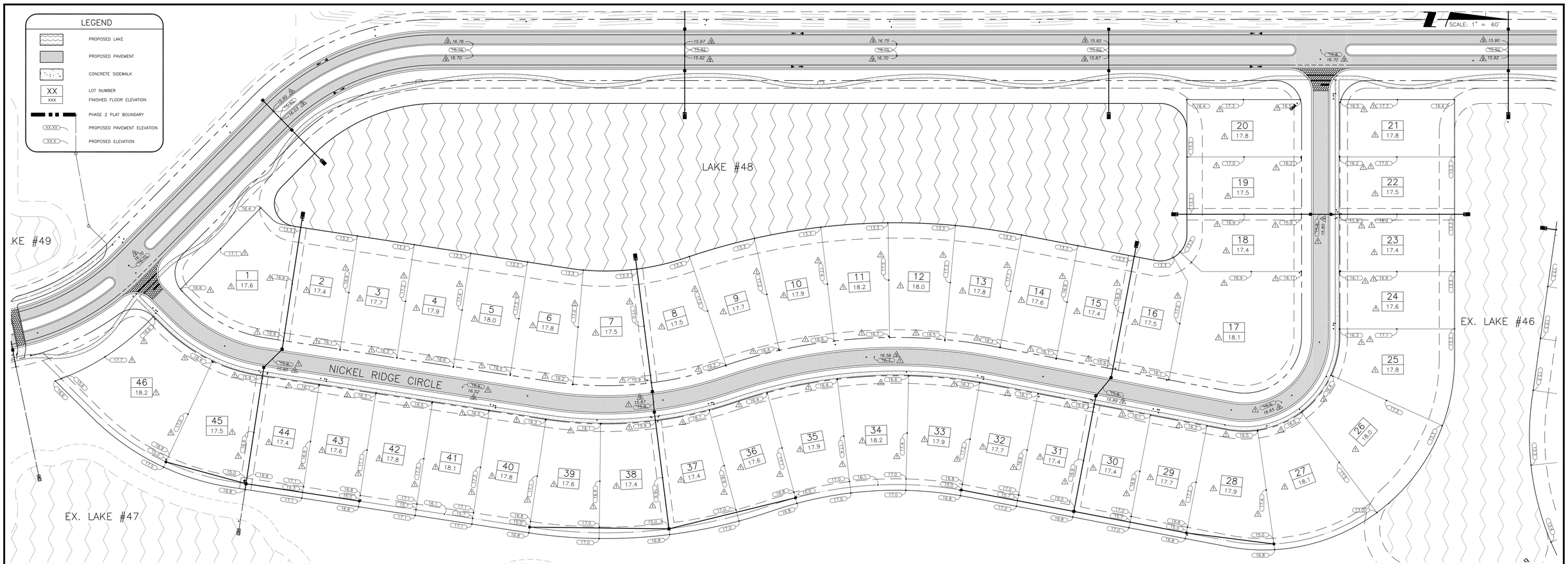

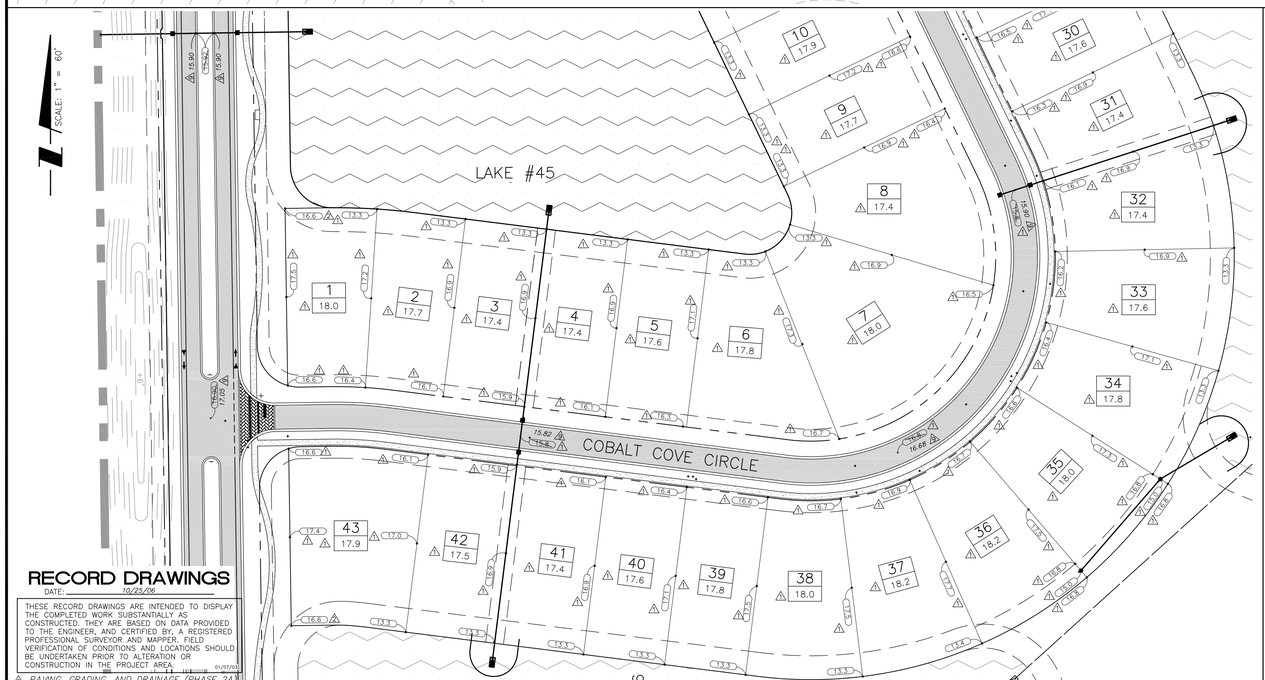

RECORD DRAWINGS
DATE: 10/25/06
THESE RECORD DRAWINGS ARE INTENDED TO DISPLAY THE COMPLETED WORK SUBSTANTIALLY AS CONSTRUCTED. THEY ARE BASED ON DATA PROVIDED TO THE ENGINEER, AND CERTIFIED BY, A REGISTERED PROFESSIONAL SURVEYOR AND MAPPER. FIELD VERIFICATION OF CONDITIONS AND LOCATIONS SHOULD BE UNDERTAKEN PRIOR TO ALTERATION OR CONSTRUCTION IN THE PROJECT AREA. 01/07/03

△ PAVING, GRADING, AND DRAINAGE (PHASE 2A)

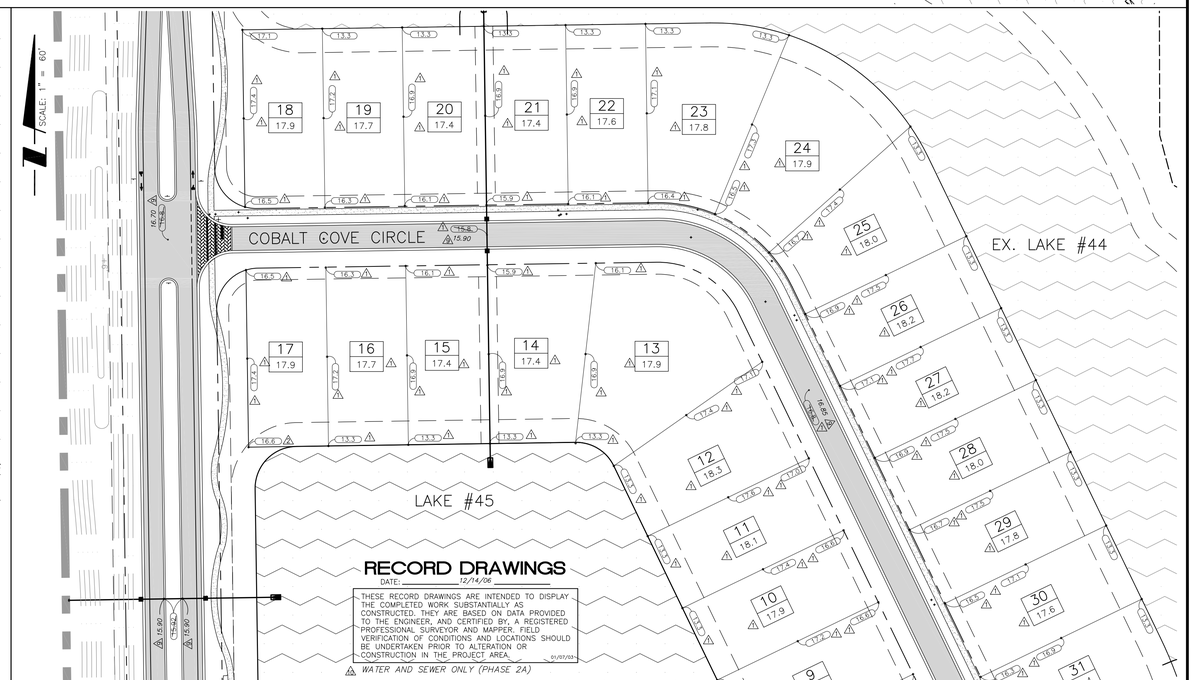

RECORD DRAWINGS
DATE: 12/14/06
THESE RECORD DRAWINGS ARE INTENDED TO DISPLAY THE COMPLETED WORK SUBSTANTIALLY AS CONSTRUCTED. THEY ARE BASED ON DATA PROVIDED TO THE ENGINEER, AND CERTIFIED BY, A REGISTERED PROFESSIONAL SURVEYOR AND MAPPER. FIELD VERIFICATION OF CONDITIONS AND LOCATIONS SHOULD BE UNDERTAKEN PRIOR TO ALTERATION OR CONSTRUCTION IN THE PROJECT AREA. 01/07/03

△ WATER AND SEWER ONLY (PHASE 2A)

10	REVISED FOR UTILITIES CONVEYANCE	12/14/06	MPO/2348		ACTIVITY	INITIALS/EMP. NO.	DATE
9	RECORD DRAWING REVISION – PAVING, GRADING, AND DRAINAGE – PHASE 2A	10/25/06	MPO/2348		DESIGNED BY:	LMG/894	4/15/05
4	REVISED FOR INSUBSTANTIAL CHANGE	5/4/06	RRM/1482		DRAWN BY:	RRM/1482	4/15/05
2	REVISED PER ENGINEER & COUNTY COMMENTS	11/29/05	RRM/1482		CHECKED BY:		
1	REVISED PER COLLIER COUNTY COMMENTS	9/28/05	RRM/1482		CONTRACT ADMIN. BY:		
△REV	NOv 29, 2007 REVISIONS 15:35	DATE	DRAWN BY / EMP. NO.	CHECKED BY / EMP. NO.	WM APPROVED BY:		

MILLERJYX:\ENG\N0442\150-Quarry Phase 2\Rev13 Rcrd Water and Sewer Phase 2B\044215010.dwg

WilsonMiller

WilsonMiller, Inc. – FL Lic.# LC-C000170
WilsonMiller, Inc. – Certificate of Authorization #43

Planners - Engineers - Ecologists - Surveyors - Landscape Architects - Transportation Consultants

WilsonMiller, Inc.
Naples - Fort Myers - Sarasota - Bradenton - Tampa - Tallahassee
4571 Colonial Boulevard, Suite 100 - Fort Myers, Florida 33912 - Phone 239-939-1020 - Fax 239-939-3412 - Web-Site www.wilsonmiller.com

CLIENT: CENTEX HOMES

PROJECT: THE QUARRY PHASE 2

DATE: FEB 2005
HORIZONTAL SCALE: 1" = 60'
VERTICAL SCALE: N/A
SEC: 14, 23 TWP: 48S RGE: 26E

TITLE: LOT GRADING PLAN (NICKEL RIDGE AND COBALT COVE)

CROSS REFERENCE FILE NO.: D-0442-48
PROJECT NUMBER: N0442-509-000

LISA M. GIORDANO
LICENSE # 59318
INDEX NUMBER: D-0442-150
SHEET NUMBER: 10 OF 38

NOTE: RECORD PAVEMENT ELEVATIONS ARE FOR 1ST LIFT OF ASPHALT ONLY.

RECORD DRAWINGS

DATE: 8/20/06

THESE RECORD DRAWINGS ARE INTENDED TO DISPLAY THE COMPLETED WORK SUBSTANTIALLY AS CONSTRUCTED. THEY ARE BASED ON DATA PROVIDED TO THE ENGINEER, AND CERTIFIED BY, A REGISTERED PROFESSIONAL SURVEYOR AND MAPPER. FIELD VERIFICATION OF CONDITIONS AND LOCATIONS SHOULD BE UNDERTAKEN PRIOR TO ALTERATION OR CONSTRUCTION IN THE PROJECT AREA. 01/07/03

- 7 WATER AND SEWER ONLY (PHASE 2A) 08/20/06
- 9 PAVING, GRADING, AND DRAINAGE (PHASE 2A) 10/05/06
- 13 WATER AND SEWER ONLY (PHASE 2B) 12/14/06
- 14 PAVING, GRADING, AND DRAINAGE (PHASE 2B-1) 12/14/06

LEGEND

- PROPOSED LAKE
- PROPOSED PAVEMENT
- CONCRETE SIDEWALK
- XX / XXX — LOT NUMBER / FINISHED FLOOR ELEVATION
- PHASE 2 PLAT BOUNDARY
- XX.XX — PROPOSED PAVEMENT ELEVATION
- XX.X — PROPOSED ELEVATION

LOT DIMENSIONS

NICKEL RIDGE

LOT#	LOT WIDTH	LOT DEPTH	AREA
1	104.8 LF.	150 LF.	0.37 Ac.
2	75 LF.	150 LF.	0.26 Ac.
3	75 LF.	150 LF.	0.26 Ac.
4	75 LF.	150 LF.	0.26 Ac.
5	75 LF.	150 LF.	0.26 Ac.
6	78.3 LF.	150 LF.	0.27 Ac.
7	86.4 LF.	150 LF.	0.30 Ac.
8	85.4 LF.	150 LF.	0.29 Ac.
9	80.4 LF.	150 LF.	0.28 Ac.
10	80.4 LF.	150 LF.	0.28 Ac.
11	80.4 LF.	150 LF.	0.28 Ac.
12	80.4 LF.	150 LF.	0.28 Ac.
13	80.5 LF.	150 LF.	0.28 Ac.
14	75 LF.	150 LF.	0.26 Ac.
15	75 LF.	150 LF.	0.26 Ac.
16	75 LF.	150 LF.	0.26 Ac.
17	224 LF.	150 LF.	0.55 Ac.
18	75 LF.	150 LF.	0.26 Ac.
19	75 LF.	150 LF.	0.26 Ac.
20	75 LF.	150 LF.	0.26 Ac.
21	75 LF.	150 LF.	0.26 Ac.
22	75 LF.	150 LF.	0.26 Ac.
23	75 LF.	150 LF.	0.26 Ac.
24	75 LF.	150 LF.	0.26 Ac.
25	94.7 LF.	154.8 LF.	0.34 Ac.
26	102.2 LF.	161.9 LF.	0.39 Ac.
27	102.1 LF.	160.9 LF.	0.38 Ac.
28	92.2 LF.	153.8 LF.	0.32 Ac.
29	75 LF.	150 LF.	0.26 Ac.
30	75 LF.	150 LF.	0.26 Ac.
31	75 LF.	150 LF.	0.26 Ac.
32	77.5 LF.	150 LF.	0.26 Ac.
33	82.6 LF.	150 LF.	0.28 Ac.
34	82.7 LF.	150 LF.	0.29 Ac.
35	82.6 LF.	150 LF.	0.28 Ac.
36	79.2 LF.	150 LF.	0.27 Ac.
37	82.1 LF.	150 LF.	0.28 Ac.
38	82.1 LF.	150 LF.	0.28 Ac.
39	82.8 LF.	150 LF.	0.28 Ac.
40	73.6 LF.	150 LF.	0.26 Ac.
41	75 LF.	150 LF.	0.26 Ac.
42	75 LF.	150 LF.	0.26 Ac.
43	75 LF.	150 LF.	0.26 Ac.
44	75 LF.	150 LF.	0.26 Ac.
45	89.4 LF.	150 LF.	0.31 aC.
46	138.9 LF.	150 LF.	0.46 aC.

COBALT COVE

LOT#	LOT WIDTH	LOT DEPTH	AREA
1	71.1 LF.	150 LF.	0.27 Ac.
2	70.2 LF.	150 LF.	0.24 Ac.
3	67 LF.	150 LF.	0.23 Ac.
4	67 LF.	150 LF.	0.23 Ac.
5	68.5 LF.	150 LF.	0.24 Ac.
6	86.9 LF.	150 LF.	0.31 Ac.
7	110 LF.	150 LF.	0.48 Ac.
8	93 LF.	150 LF.	0.35 Ac.
9	67 LF.	150 LF.	0.23 Ac.
10	67 LF.	150 LF.	0.23 Ac.
11	67 LF.	150 LF.	0.23 Ac.
12	67 LF.	150 LF.	0.23 Ac.
13	119.7 LF.	150 LF.	0.48 Ac.
14	68.5 LF.	150 LF.	0.24 Ac.
15	68.5 LF.	150 LF.	0.24Ac.
16	67 LF.	150 LF.	0.23 Ac.
17	67 LF.	150 LF.	0.23 Ac.
18	67 LF.	150 LF.	0.23 Ac.
19	67 LF.	150 LF.	0.23 Ac.
20	68.5 LF.	150 LF.	0.24 Ac.
21	68.5 LF.	150 LF.	0.24 Ac.
22	67 LF.	150 LF.	0.23 Ac.
23	88.8 LF.	150 LF.	0.32 Ac.
24	91.6 LF.	150 LF.	0.35 Ac.
25	81.5 LF.	150 LF.	0.28 Ac.
26	67 LF.	150 LF.	0.23 Ac.
27	67 LF.	150 LF.	0.23 Ac.
28	67 LF.	150 LF.	0.23 Ac.
29	68.5 LF.	150 LF.	0.24 Ac.
30	68.5 LF.	150 LF.	0.24 Ac.
31	85 LF.	150 LF.	0.26 Ac.
32	82.1 LF.	150 LF.	0.28 Ac.
33	81.9 LF.	150 LF.	0.28 Ac.
34	81.9 LF.	150 LF.	0.28 Ac.
35	81.9 LF.	150 LF.	0.28 Ac.
36	81.9 LF.	150 LF.	0.28 Ac.
37	81.9 LF.	150 LF.	0.28 Ac.
38	79.6 LF.	150 LF.	0.28 Ac.
39	68.5 LF.	150 LF.	0.24 Ac.
40	68.5 LF.	150 LF.	0.24 Ac.
41	67 LF.	150 LF.	0.23 Ac.
42	67 LF.	150 LF.	0.23 Ac.
43	122.8 LF.	150 LF.	0.42 Ac.

QUARRY SHORES SOUTH

LOT#	LOT WIDTH	LOT DEPTH	AREA
34	95 LF.	153 LF	0.33 Ac.
35	95 LF.	153 LF	0.33 Ac.
36	95 LF.	153 LF	0.33 Ac.
37	95 LF.	153 LF	0.33 Ac.
38	95 LF.	153 LF	0.33 Ac.
39	98.6 LF.	153 LF	0.34 Ac.
40	95 LF.	153 LF	0.33 Ac.
41	95 LF.	153 LF	0.34 Ac.
42	95.8 LF.	153 LF	0.34 Ac.
43	94.7 LF.	165 LF.	0.36 Ac.
44	95 LF.	165 LF.	0.36 Ac.
45	95 LF.	165 LF.	0.36 Ac.
46	95 LF.	165 LF.	0.39 Ac.
47	95 LF.	165 LF.	0.42 Ac.
48	138.3 LF.	165 LF.	0.55 Ac.
49	141.9 LF.	165 LF.	0.66 Ac.
50	141.9 LF.	165 LF.	0.66 Ac.
51	137.4 LF.	165 LF.	0.55 Ac.
52	95 LF.	165 LF.	0.42 Ac.
53	95 LF.	165 LF.	0.38 Ac.
54	95 LF.	165 LF.	0.36 Ac.
55	95 LF.	165 LF.	0.36 Ac.
56	94.9 LF.	165 LF.	0.36 Ac.
57	110.3 LF.	165 LF.	0.42 Ac.
58	95 LF.	165 LF.	0.36 Ac.
59	97.8 LF.	165 LF.	0.37 Ac.
60	95 LF.	165 LF.	0.36 Ac.
61	95 LF.	165 LF.	0.36 Ac.
62	171.9 LF.	189.6 LF.	0.87 Ac.
63	135 LF.	188.5 LF.	0.53 Ac.
64	95 LF.	165 LF.	0.36 Ac.
65	95 LF.	165 LF.	0.36 Ac.
66	95 LF.	165 LF.	0.36 Ac.
67	115.7 LF.	165 LF.	0.44 Ac.
68	151.1 LF.	165 LF.	0.60 Ac.
69	151.1 LF.	165 LF.	0.60 Ac.
70	135.5 LF.	165 LF.	0.53 Ac.
71	95 LF.	165 LF.	0.43 Ac.
72	97.5 LF.	165 LF.	0.36 Ac.
73	148.5 LF.	165 LF.	0.51 Ac.
74	95 LF.	165 LF.	0.36 Ac.
75	98 LF.	165 LF.	0.37 Ac.
76	95 LF.	165 LF.	0.36 Ac.
77	111 LF.	165 LF.	0.42 Ac.
78	113.9 LF.	170 LF.	0.44 Ac.
79	100.4 LF.	170 LF.	0.39 Ac.
80	100.4 LF.	170 LF.	0.39 Ac.
81	113.9 LF.	170 LF.	0.46 Ac.

QUARRY SHORES NORTH

LOT#	LOT WIDTH	LOT DEPTH	AREA
1	111 LF.	165 LF.	0.42 Ac.
2	82.4 LF.	165 LF.	0.31 Ac.
3	75 LF.	165 LF.	0.28 Ac.
4	75 LF.	165 LF.	0.28 Ac.
5	79.4 LF.	165 LF.	0.30 Ac.
6	77.9 LF.	165 LF.	0.31 Ac.
7	75 LF.	165 LF.	0.33 Ac.
8	75 LF.	165 LF.	0.30 Ac.
9	124 LF.	165 LF.	0.53 Ac.
10	123.5 LF.	165 LF.	0.52 Ac.
11	136 LF.	165 LF.	0.59 Ac.
12	122.8 LF.	165 LF.	0.51 Ac.
13	75 LF.	165 LF.	0.31 Ac.
14	75 LF.	165 LF.	0.33 Ac.
15	78.3 LF.	165 LF.	0.31 Ac.
16	76.4 LF.	165 LF.	0.29 Ac.
17	75 LF.	165 LF.	0.28 Ac.
18	75 LF.	165 LF.	0.28 Ac.
19	83.8 LF.	165 LF.	0.32 Ac.
20	84.3 LF.	165 LF.	0.32 Ac.
21	78.4 LF.	165 LF.	0.30 Ac.
22	75 LF.	165 LF.	0.28 Ac.
23	75 LF.	165 LF.	0.28 Ac.
24	75 LF.	165 LF.	0.28 Ac.
25	75 LF.	165 LF.	0.28 Ac.
26	75 LF.	165 LF.	0.28 Ac.
27	75 LF.	165 LF.	0.28 Ac.
28	75 LF.	165 LF.	0.29 Ac.
29	75 LF.	165 LF.	0.31 Ac.
30	75 LF.	165 LF.	0.33 Ac.
31	75 LF.	165 LF.	0.29 Ac.
32	127.6 LF.	165 LF.	0.65 Ac.
33	173.4 LF.	165 LF.	0.69 Ac.
34	127.6 LF.	165 LF.	0.65 Ac.
35	75 LF.	165 LF.	0.29 Ac.
36	75 LF.	165 LF.	0.33 Ac.
37	75 LF.	165 LF.	0.31 Ac.
38	75 LF.	165 LF.	0.29 Ac.
39	75 LF.	165 LF.	0.28 Ac.
40	75 LF.	165 LF.	0.28 Ac.
41	75 LF.	165 LF.	0.28 Ac.
42	75 LF.	165 LF.	0.28 Ac.
43	75 LF.	165 LF.	0.28 Ac.
44	75 LF.	165 LF.	0.28 Ac.

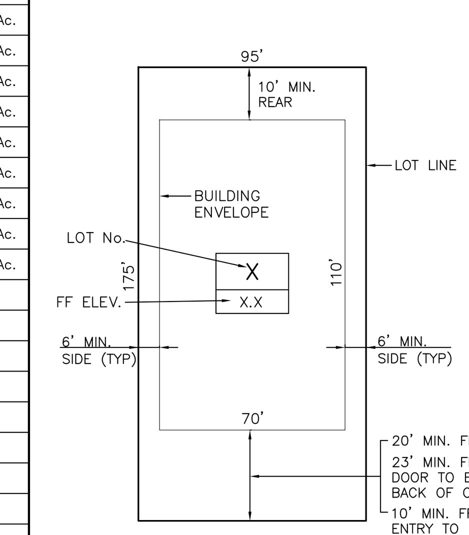

SINGLE FAMILY LOT
95' x 175' (TYP.)
(QUARRY SHORES SOUTH)

TYPICAL LOT CONFIGURATION
N.T.S.

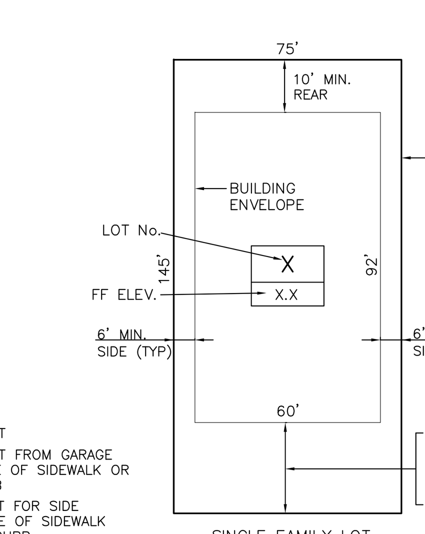

SINGLE FAMILY LOT
75' x 145'
(NICKEL RIDGE)
(QUARRY SHORES NORTH)

TYPICAL LOT CONFIGURATION
N.T.S.

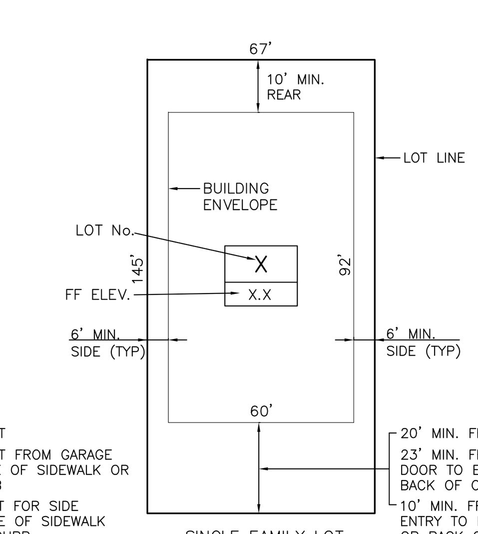

SINGLE FAMILY LOT
67' x 145'
(COBALT COVE)

TYPICAL LOT CONFIGURATION
N.T.S.

REV NO.	REVISION	DATE	DRAWN BY / EMP. NO.	CHECKED BY / EMP. NO.
14	RECORD DRAWING REVISION – PAVING, GRADING, AND DRAINAGE – PHASE 2B	12/14/06	MPO/2348	
10	REVISED FOR UTILITIES CONVEYANCE	12/14/06	MPO/2348	
8	REVISED DRAINAGE PER CLIENT AND ENGINEER	10/5/06	RRM/1482	
5	REVISED PER ENGINEER & OWNER	6/3/06	RRM/1482	
4	REVISED FOR INSUBSTANTIAL CHANGE	5/4/06	RRM/1482	
2	REVISED PER ENGINEER & COUNTY COMMENTS	11/29/05	RRM/1482	
1	REVISED PER COLLIER COUNTY COMMENTS	9/28/05	RRM/1482	

FEB 07, 2008 – 09:50:02 TDASILVA|X:\ENG\N0442\150-QuarryPhase2\Rev14-rcrdPaving&Drainage\044215011.dwg

ACTIVITY	INITIALS/EMP. NO.	DATE
DESIGNED BY:	LMG/894	4/15/05
DRAWN BY:	RRM/1482	4/15/05
CHECKED BY:		
CONTRACT ADMIN. BY:		
WM APPROVED BY:		

WilsonMiller
WilsonMiller, Inc. – FL Lic.# LC-C000170
WilsonMiller, Inc. – Certificate of Authorization #43
Planners • Engineers • Ecologists • Surveyors • Landscape Architects • Transportation Consultants
WilsonMiller, Inc.
Naples • Fort Myers • Sarasota • Bradenton • Tampa • Tallahassee
4571 Colonial Boulevard, Suite 100 • Fort Myers, Florida 33912 • Phone 239-939-1020 • Fax 239-939-3412 • Web-Site www.wilsonmiller.com

CLIENT: CENTEX HOMES

PROJECT: THE QUARRY PHASE 2

DATE: FEB 2005
HORIZONTAL SCALE: 1" = 80'
VERTICAL SCALE: N/A
SEC: 14, 23 TWP: 48S RGE: 26E

TITLE: LOT GRADING PLAN (QUARRY SHORES)

CROSS REFERENCE FILE NO.: D-0442-48
PROJECT NUMBER: N0442-509-000

LISA M. GIORDANO
LICENSE # 59318

INDEX NUMBER: D-0442-150
SHEET NUMBER: 11 OF 38

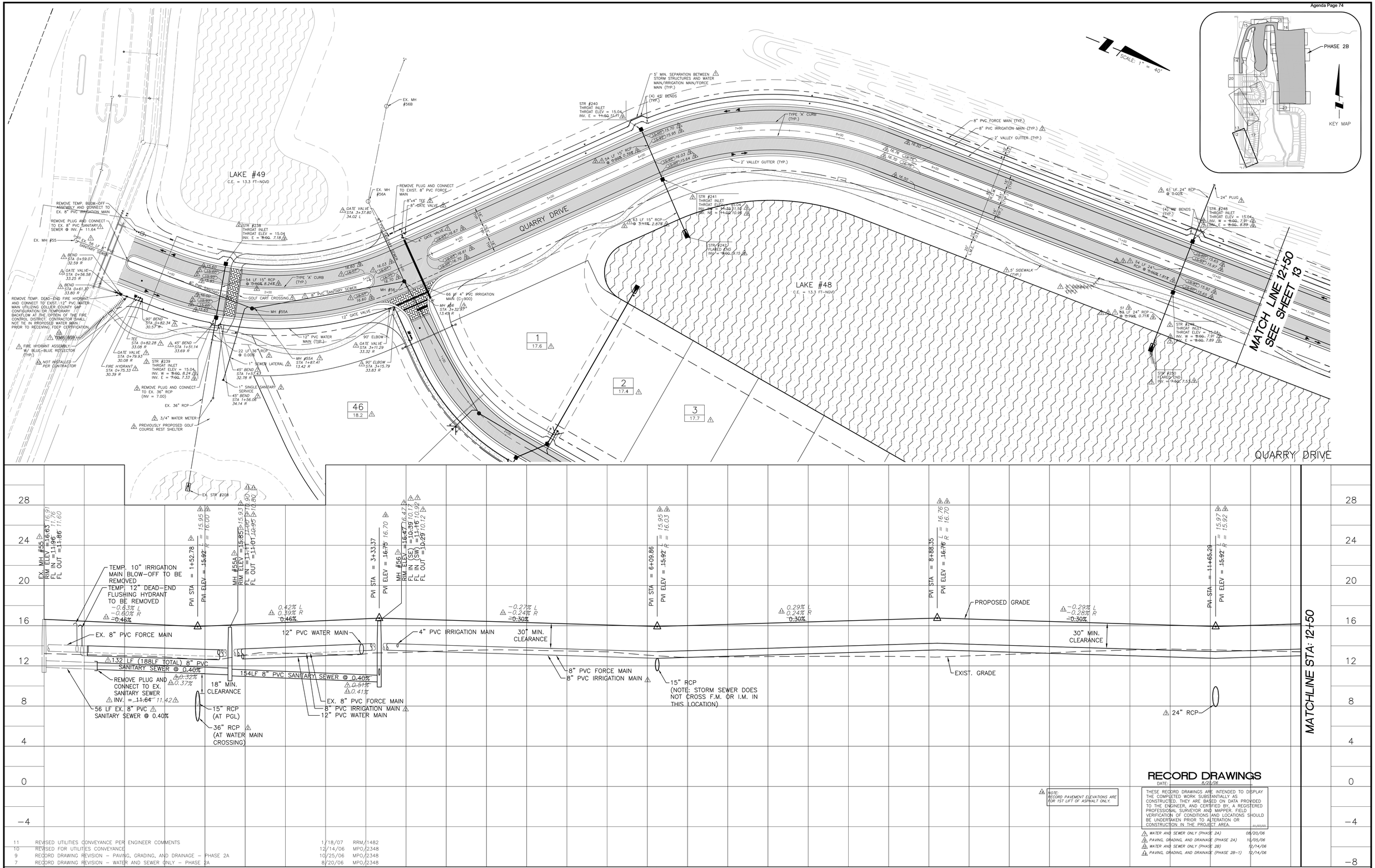

NOTE: RECORD PAVEMENT ELEVATIONS ARE FOR 1ST LIFT OF ASPHALT ONLY.

RECORD DRAWINGS

DATE: 8/20/06

THESE RECORD DRAWINGS ARE INTENDED TO DISPLAY THE COMPLETED WORK SUBSTANTIALLY AS CONSTRUCTED. THEY ARE BASED ON DATA PROVIDED TO THE ENGINEER, AND CERTIFIED BY, A REGISTERED PROFESSIONAL SURVEYOR AND MAPPER. FIELD VERIFICATION OF CONDITIONS AND LOCATIONS SHOULD BE UNDERTAKEN PRIOR TO ALTERATION OR CONSTRUCTION IN THE PROJECT AREA. 01/05/05

1	WATER AND SEWER ONLY (PHASE 2A)	08/20/06
2	PAVING, GRADING, AND DRAINAGE (PHASE 2A)	10/05/06
3	WATER AND SEWER ONLY (PHASE 2B)	12/14/06
4	PAVING, GRADING, AND DRAINAGE (PHASE 2B-1)	12/14/06

REV NO.	REVISION	DATE	DRAWN BY / EMP. NO.	CHECKED BY / EMP. NO.
11	REVISED UTILITIES CONVEYANCE PER ENGINEER COMMENTS	1/18/07	RRM/1482	
10	REVISED FOR UTILITIES CONVEYANCE	12/14/06	MPO/2348	
9	RECORD DRAWING REVISION – PAVING, GRADING, AND DRAINAGE – PHASE 2A	10/25/06	MPO/2348	
7	RECORD DRAWING REVISION – WATER AND SEWER ONLY – PHASE 2A	8/20/06	MPO/2348	
5	REVISED PER ENGINEER & OWNER	6/3/06	RRM/1482	
4	REVISED FOR INSUBSTANTIAL CHANGE	5/4/06	RRM/1482	
3	REVISED PER FDEP COMMENTS AND PER ENGINEER	3/22/06	RRM/1482	
2	REVISED PER ENGINEER & COLLIER COUNTY COMMENTS	11/29/05	RRM/1482	
1	REVISED PER COLLIER COUNTY COMMENTS	9/28/05	RRM/1482	

Feb 07, 2008 – 14:45:05 TDASILVA[X:\ENG\N0442\150-QuarryPhase2\Rev14-rcrdPaving&Drainage\044215012.dwg

ACTIVITY	INITIALS/EMP. NO.	DATE
DESIGNED BY:	LMG/894	4/15/05
DRAWN BY:	RRM/1482	4/15/05
CHECKED BY:		
CONTRACT ADMIN. BY:		
WM APPROVED BY:		

WilsonMiller, Inc. – FL Lic.# LC-C000170
WilsonMiller, Inc. – Certificate of Authorization #43

WilsonMiller

Planners - Engineers - Ecologists - Surveyors - Landscape Architects - Transportation Consultants

WilsonMiller, Inc.

Naples - Fort Myers - Sarasota - Bradenton - Tampa - Tallahassee

4571 Colonial Boulevard, Suite 100 - Fort Myers, Florida 33912 - Phone 239-939-1020 - Fax 239-939-3412 - Web-Site www.wilsonmiller.com

CLIENT: CENTEX HOMES

PROJECT: THE QUARRY PHASE 2

DATE: FEB 2005

HORIZONTAL SCALE: 1" = 40'

VERTICAL SCALE: 1" = 4'

SEC: 14, 23 TWP: 48S RGE: 26E

CROSS REFERENCE FILE NO.: D-0442-48

TITLE: PLAN AND PROFILE
QUARRY DRIVE
STA. 0+00 TO STA. 12+50

PROJECT NUMBER: N0442-509-000

LISA M. GIORDANO
LICENSE # 59318

INDEX NUMBER: D-0442-150

SHEET NUMBER: 12 OF 38

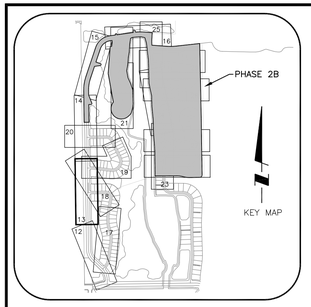

SCALE: 1" = 40'

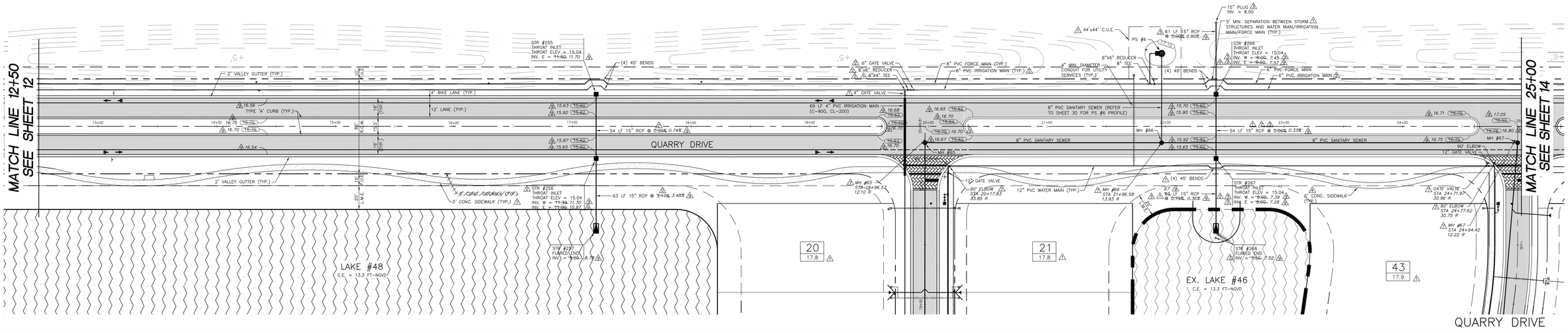

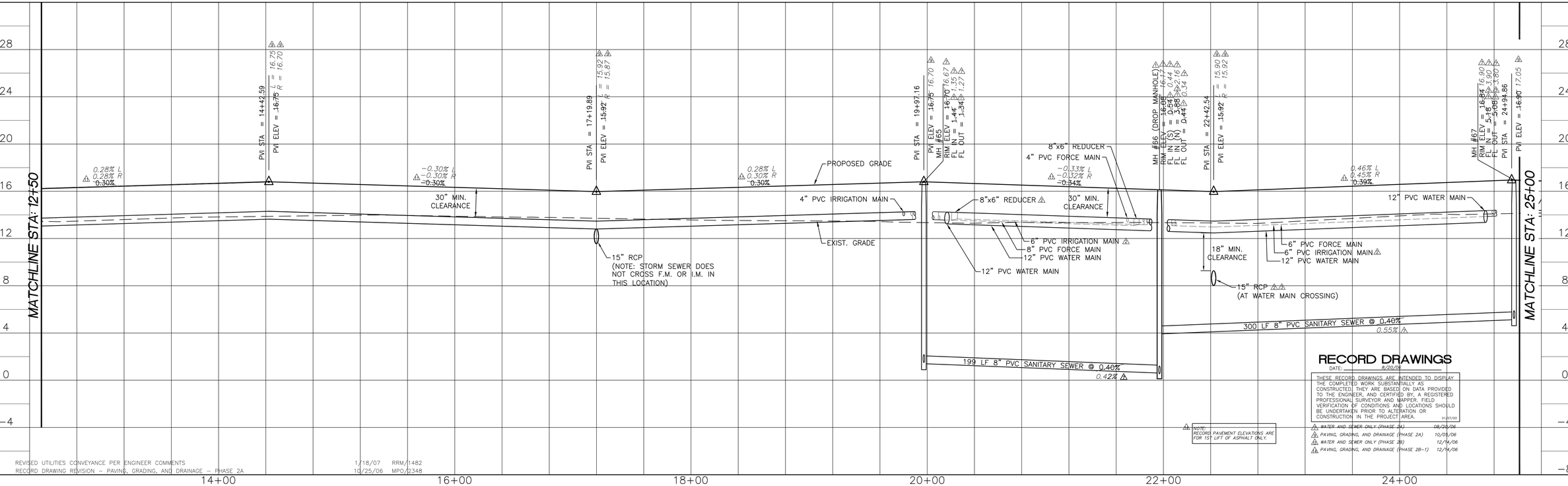

RECORD DRAWINGS

DATE: 8/20/08

THESE RECORD DRAWINGS ARE INTENDED TO DISPLAY THE COMPLETED WORK SUBSTANTIALLY AS CONSTRUCTED. THEY ARE BASED ON DATA PROVIDED TO THE ENGINEER, AND CERTIFIED BY, A REGISTERED PROFESSIONAL SURVEYOR AND MAPPER. FIELD VERIFICATION OF CONDITIONS AND LOCATIONS SHOULD BE UNDERTAKEN PRIOR TO ALTERATION OR CONSTRUCTION IN THE PROJECT AREA. 01/07/03

NOTE:
RECORD PAVEMENT ELEVATIONS ARE FOR 1ST LIFT OF ASPHALT ONLY.

- WATER AND SEWER ONLY (PHASE 2A) 08/20/06
- PAVING, GRADING, AND DRAINAGE (PHASE 2A) 10/03/06
- WATER AND SEWER ONLY (PHASE 2B) 12/14/06
- PAVING, GRADING, AND DRAINAGE (PHASE 2B-1) 12/14/06

REV NO.	REVISION	DATE	DRAWN BY / EMP. NO.	CHECKED BY / EMP. NO.
11	REVISED UTILITIES CONVEYANCE PER ENGINEER COMMENTS	1/18/07	RRM/1482	
9	RECORD DRAWING REVISION – PAVING, GRADING, AND DRAINAGE – PHASE 2A	10/25/06	MPO/2348	
7	RECORD DRAWING REVISION – WATER AND SEWER ONLY – PHASE 2A	8/14/06	MPO/2348	
4	REVISED FOR INSUBSTANTIAL CHANGE	5/4/06	RRM/1482	
3	REVISED PER FDEP COMMENTS AND PER ENGINEER	3/22/06	RRM/1482	
2	REVISED PER ENGINEER & COUNTY COMMENTS	11/29/05	RRM/1482	
1	REVISED PER COLLIER COUNTY COMMENTS	9/28/05	RRM/1482	

Feb 07, 2008 – 15:04:39 TDASILVA(K:\ENG\N0442\150-QuarryPhase2\Rev14-rcrdPaving&Drainage\044215013.dwg

ACTIVITY	INITIALS/EMP. NO.	DATE
DESIGNED BY:	LMG/894	4/15/05
DRAWN BY:	RRM/1482	4/15/05
CHECKED BY:		
CONTRACT ADMIN. BY:		
WM APPROVED BY:		

WilsonMiller
Planners · Engineers · Ecologists · Surveyors · Landscape Architects · Transportation Consultants
WilsonMiller, Inc.
Naples · Fort Myers · Sarasota · Bradenton · Tampa · Tallahassee
4571 Colonial Boulevard, Suite 100 · Fort Myers, Florida 33912 · Phone 239-939-1020 · Fax 239-939-3412 · Web-Site www.wilsonmiller.com
WilsonMiller, Inc. – FL Lic # LC-0000176
WilsonMiller, Inc. – Certificate of Authorization #43

CLIENT: CENTEX HOMES

PROJECT: THE QUARRY PHASE2

DATE: FEB 2005
HORIZONTAL SCALE: 1" = 40'
VERTICAL SCALE: 1" = 4'
SEC: 14, 23 TWP: 48S RGE: 26E

TITLE: PLAN AND PROFILE
QUARRY DRIVE
12+50 TO 25+00

LISA M. GIORDANO
LICENSE # 59318

CROSS REFERENCE FILE NO.: D-0442-48
PROJECT NUMBER: N0442-509-000
INDEX NUMBER: D-0442-150
SHEET NUMBER: 13 OF 38

SCALE: 1" = 40'

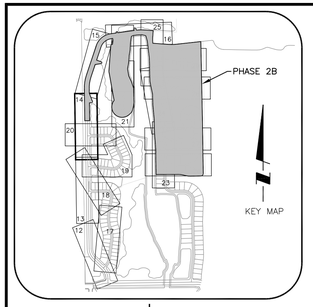

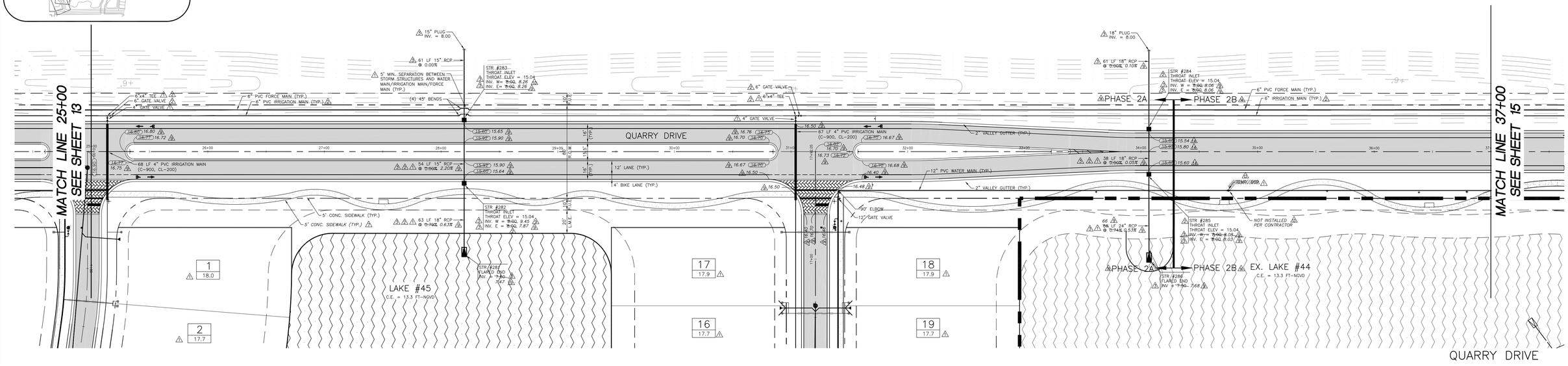

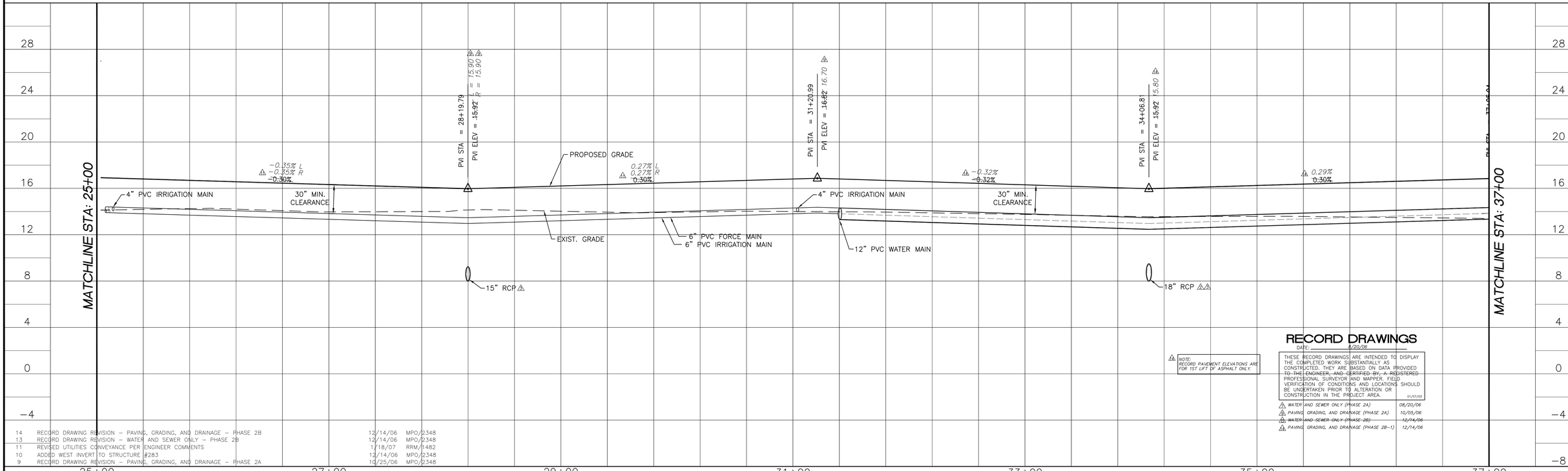

NOTE: RECORD PAVEMENT ELEVATIONS ARE FOR 1ST LIFT OF ASPHALT ONLY.

RECORD DRAWINGS

DATE: 8/20/06

THESE RECORD DRAWINGS ARE INTENDED TO DISPLAY THE COMPLETED WORK SUBSTANTIALLY AS CONSTRUCTED. THEY ARE BASED ON DATA PROVIDED TO THE ENGINEER, AND CERTIFIED BY, A REDISTERED PROFESSIONAL SURVEYOR AND MAPPER. FIELD VERIFICATION OF CONDITIONS AND LOCATIONS SHOULD BE UNDERTAKEN PRIOR TO ALTERATION OR CONSTRUCTION IN THE PROJECT AREA. 01/07/03

WATER AND SEWER ONLY (PHASE 2A)	08/20/06
PAVING, GRADING, AND DRAINAGE (PHASE 2A)	10/05/06
~~WATER AND SEWER ONLY (PHASE 2B)~~	~~12/14/06~~
PAVING, GRADING, AND DRAINAGE (PHASE 2B-1)	12/14/06

REV NO.	REVISION	DATE	DRAWN BY / EMP. NO.	CHECKED BY / EMP. NO.
14	RECORD DRAWING REVISION – PAVING, GRADING, AND DRAINAGE – PHASE 2B	12/14/06	MPO/2348	
13	RECORD DRAWING REVISION – WATER AND SEWER ONLY – PHASE 2B	12/14/06	MPO/2348	
11	REVISED UTILITIES CONVEYANCE PER ENGINEER COMMENTS	1/18/07	RRM/1482	
10	ADDED WEST INVERT TO STRUCTURE #283	12/14/06	MPO/2348	
9	RECORD DRAWING REVISION – PAVING, GRADING, AND DRAINAGE – PHASE 2A	10/25/06	MPO/2348	
7	RECORD DRAWING REVISION – WATER AND SEWER ONLY – PHASE 2A	8/14/06	MPO/2348	
4	REVISED FOR INSUBSTANTIAL CHANGE	5/4/06	RRM/1482	
3	REVISED PER FDEP COMMENTS AND PER ENGINEER	3/22/06	RRM/1482	
2	REVISED PER ENGINEER AND COUNTY COMMENTS	11/29/05	RRM/1482	
1	REVISED PER COLLIER COUNTY COMMENTS	9/28/05	RRM/1482	

Feb 07, 2008 – 17:52:01 TDASILVA(X:\ENG\N0442\150-QuarryPhase2\Rev14-rcrdPaving&Drainage\04215014.dwg

ACTIVITY	INITIALS/EMP. NO.	DATE
DESIGNED BY:	LMG/894	4/15/05
DRAWN BY:	RRM/1482	4/15/05
CHECKED BY:		
CONTRACT ADMIN. BY:		
WM APPROVED BY:		

WilsonMiller
WilsonMiller, Inc. – FL Lic # LC-C000170
WilsonMiller, Inc. – Certificate of Authorization #43
Planners · Engineers · Ecologists · Surveyors · Landscape Architects · Transportation Consultants
WilsonMiller, Inc.
Naples · Fort Myers · Sarasota · Bradenton · Tampa · Tallahassee
4571 Colonial Boulevard, Suite 100 · Fort Myers, Florida 33912 · Phone 239-939-1020 · Fax 239-939-3412 · Web: Site www.wilsonmiller.com

CLIENT: CENTEX HOMES

PROJECT: THE QUARRY PHASE 2

DATE: FEB 2005
HORIZONTAL SCALE: 1" = 40'
VERTICAL SCALE: 1" = 4'
SEC: 14, 23 TWP: 48S RGE: 26E
CROSS REFERENCE FILE NO.: D-0442-48

TITLE: PLAN AND PROFILE
QUARRY DRIVE
STA. 25+00 TO STA. 37+00

PROJECT NUMBER: N0442-509-000

LISA M. GIORDANO
LICENSE # 59318

INDEX NUMBER: D-0442-150

SHEET NUMBER: 14 OF 38

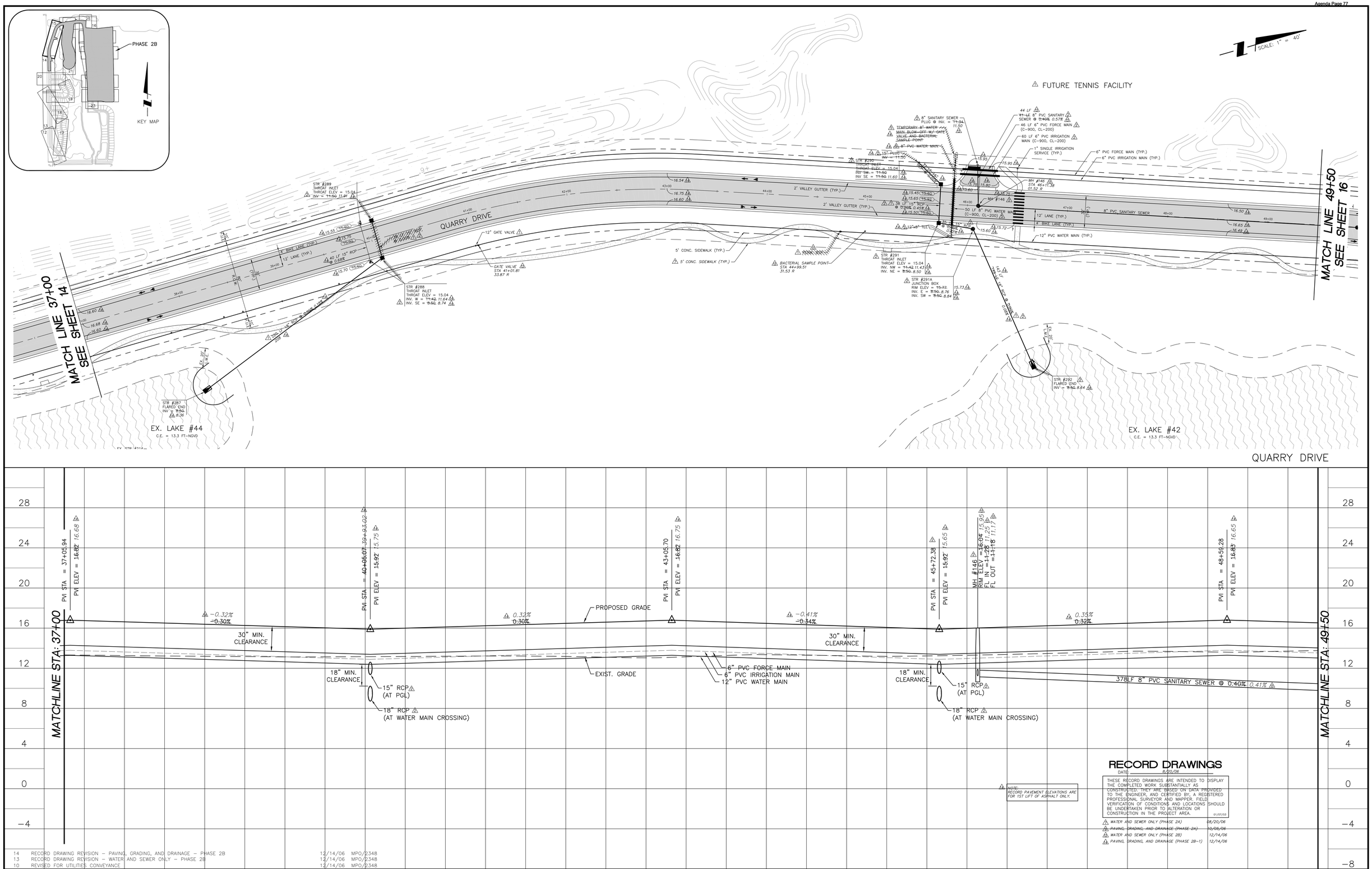

RECORD DRAWINGS
DATE: 8/20/06

THESE RECORD DRAWINGS ARE INTENDED TO DISPLAY THE COMPLETED WORK SUBSTANTIALLY AS CONSTRUCTED. THEY ARE BASED ON DATA PROVIDED TO THE ENGINEER, AND CERTIFIED BY, A REGISTERED PROFESSIONAL SURVEYOR AND MAPPER. FIELD VERIFICATION OF CONDITIONS AND LOCATIONS SHOULD BE UNDERTAKEN PRIOR TO ALTERATION OR CONSTRUCTION IN THE PROJECT AREA. 01/07/03

NOTE:
RECORD PAVEMENT ELEVATIONS ARE FOR 1ST LIFT OF ASPHALT ONLY.

1	WATER AND SEWER ONLY (PHASE 2A)	08/20/06
2	PAVING, GRADING, AND DRAINAGE (PHASE 2A)	10/06/06
3	WATER AND SEWER ONLY (PHASE 2B)	12/14/06
4	PAVING, GRADING, AND DRAINAGE (PHASE 2B-1)	12/14/06

14	RECORD DRAWING REVISION – PAVING, GRADING, AND DRAINAGE – PHASE 2B	12/14/06	MPO/2348
13	RECORD DRAWING REVISION – WATER AND SEWER ONLY – PHASE 2B	12/14/06	MPO/2348
10	REVISED FOR UTILITIES CONVEYANCE	12/14/06	MPO/2348
5	REVISED PER ENGINEER & OWNER	6/3/06	RRM/1482
4	REVISED FOR INSUBSTANTIAL CHANGE	5/4/06	RRM/1482
3	REVISED PER FDEP COMMENTS AND PER ENGINEER	3/22/06	RRM/1482
2	REVISED PER ENGINEER AND COUNTY COMMENTS	11/29/05	RRM/1482
1	REVISED PER COLLIER COUNTY COMMENTS	9/28/05	RRM/1482

REV NO.	REVISION	DATE	DRAWN BY / EMP. NO.	CHECKED BY / EMP. NO.

Feb 07, 2008 – 14:56:20 TDASILVA(X:\ENG\N0442\150-QuarryPhase2\Rev14-rcrdPaving&Drainage\04421501 5.dwg

ACTIVITY	INITIALS/EMP. NO.	DATE
DESIGNED BY:	LMG/894	4/15/05
DRAWN BY:	RRM/1482	04/15/05
CHECKED BY:		
CONTRACT ADMIN. BY:		
WM APPROVED BY:		

WilsonMiller
Planners - Engineers - Ecologists - Surveyors - Landscape Architects - Transportation Consultants
WilsonMiller, Inc.
Naples - Fort Myers - Sarasota - Bradenton - Tampa - Tallahassee
4571 Colonial Boulevard, Suite 100 - Fort Myers, Florida 33912 - Phone 239-939-1020 - Fax 239-939-3412 - Web-Site www.wilsonmiller.com
WilsonMiller, Inc. – FL Lic # LC-0000170
WilsonMiller, Inc. – Certificate of Authorization #43

CLIENT: CENTEX HOMES

PROJECT: THE QUARRY PHASE 2

DATE: FEB 2005
HORIZONTAL SCALE: 1" = 40'
VERTICAL SCALE: 1" = 4'
SEC: 14, 23 TWP: 48S RGE: 26E
CROSS REFERENCE FILE NO.: D-0442-48
PROJECT NUMBER: N0442-509-000

TITLE: PLAN AND PROFILE
QUARRY DRIVE
37+00 TO 49+50

LISA M. GIORDANO
LICENSE # 59318

INDEX NUMBER: D-0442-150

SHEET NUMBER: 15 OF 38

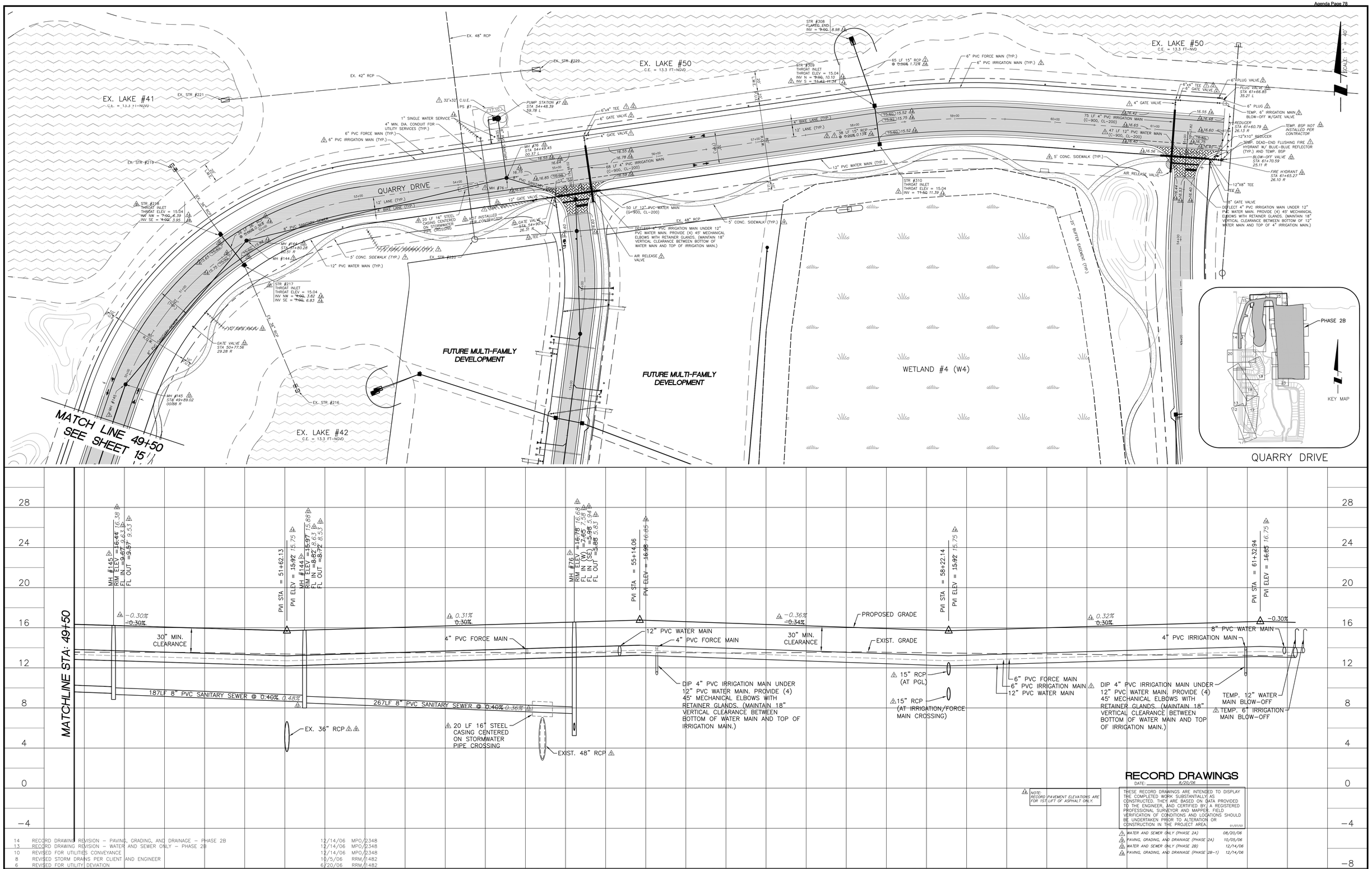

NOTE: RECORD PAVEMENT ELEVATIONS ARE FOR 1ST LIFT OF ASPHALT ONLY.

RECORD DRAWINGS
DATE: 8/20/08

THESE RECORD DRAWINGS ARE INTENDED TO DISPLAY THE COMPLETED WORK SUBSTANTIALLY AS CONSTRUCTED. THEY ARE BASED ON DATA PROVIDED TO THE ENGINEER, AND CERTIFIED BY A REGISTERED PROFESSIONAL SURVEYOR AND MAPPER. FIELD VERIFICATION OF CONDITIONS AND LOCATIONS SHOULD BE UNDERTAKEN PRIOR TO ALTERATION OR CONSTRUCTION IN THE PROJECT AREA. 01/03/08

- WATER AND SEWER ONLY (PHASE 2A) 08/20/06
- PAVING, GRADING, AND DRAINAGE (PHASE 2A) 10/05/06
- WATER AND SEWER ONLY (PHASE 2B) 12/14/06
- PAVING, GRADING, AND DRAINAGE (PHASE 2B-1) 12/14/06

REV NO.	REVISION	DATE	DRAWN BY / EMP. NO.	CHECKED BY / EMP. NO.
14	RECORD DRAWING REVISION – PAVING, GRADING, AND DRAINAGE – PHASE 2B	12/14/06	MPO/2348	
13	RECORD DRAWING REVISION – WATER AND SEWER ONLY – PHASE 2B	12/14/06	MPO/2348	
10	REVISED FOR UTILITIES CONVEYANCE	12/14/06	MPO/2348	
8	REVISED STORM DRAINS PER CLIENT AND ENGINEER	10/5/06	RRM/1482	
6	REVISED FOR UTILITY DEVIATION	6/20/06	RRM/1482	
5	REVISED PER ENGINEER & OWNER	6/3/06	RRM/1482	
4	REVISED FOR INSUBSTANTIAL CHANGE	5/4/06	RRM/1482	
3	REVISED PER FDEP COMMENTS AND PER ENGINEER	3/22/06	RRM/1482	
2	REVISED PER ENGINEER & COUNTY COMMENTS	11/29/05	RRM/1482	
1	REVISED PER COLLIER COUNTY COMMENTS	9/28/05	RRM/1482	

Feb 19, 2008 – 12:05:59 TDASILVA(K:\ENG\N0442\150-QuarryPhase2\Rev14-rcrdPaving&Drainage\04421501 6.dwg

ACTIVITY	INITIALS/EMP. NO.	DATE
DESIGNED BY:	LMG/894	4/15/05
DRAWN BY:	RRM/1482	4/15/05
CHECKED BY:		
CONTRACT ADMIN. BY:		
WM APPROVED BY:		

WilsonMiller
Planners - Engineers - Ecologists - Surveyors - Landscape Architects - Transportation Consultants
WilsonMiller, Inc.
Naples · Fort Myers · Sarasota · Bradenton · Tampa · Tallahassee
4571 Colonial Boulevard, Suite 100 · Fort Myers, Florida 33912 · Phone 239-939-1020 · Fax 239-939-3412 · Web-Site www.wilsonmiller.com
WilsonMiller, Inc. – FL Lic # LC-0000170
WilsonMiller, Inc. – Certificate of Authorization #43

CLIENT: CENTEX HOMES
PROJECT: THE QUARRY PHASE 2

DATE: FEB 2005
HORIZONTAL SCALE: 1" = 40'
VERTICAL SCALE: 1" = 4'
SEC: 14, 23 TWP: 48S RGE: 26E
CROSS REFERENCE FILE NO.: D-0442-48

TITLE: PLAN AND PROFILE
QUARRY DRIVE
49+50 TO 61+67.49

PROJECT NUMBER: N0442-509-000

LISA M. GIORDANO
LICENSE # 59318
INDEX NUMBER: D-0442-150
SHEET NUMBER: 16 OF 38

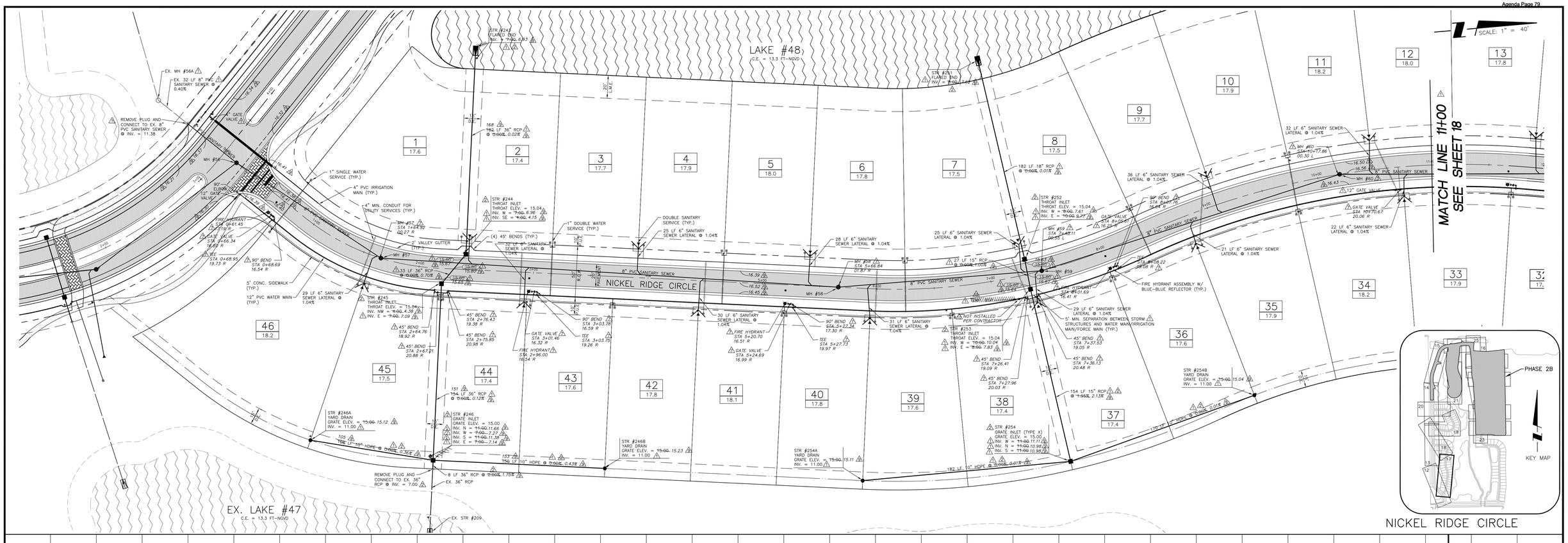

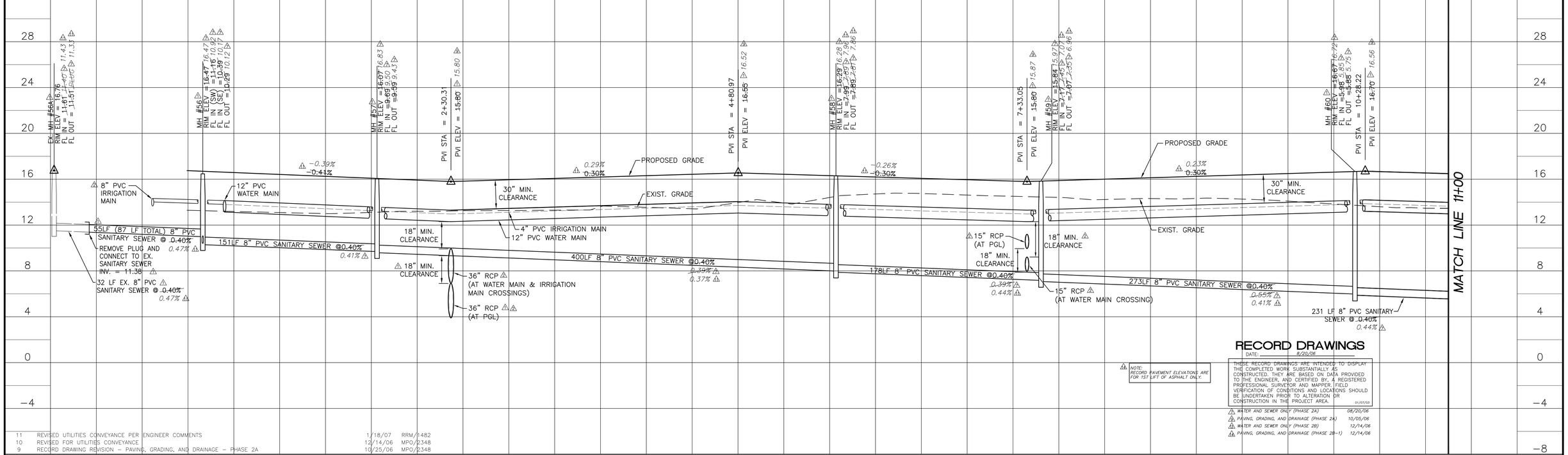

RECORD DRAWINGS

DATE: 8/20/06

THESE RECORD DRAWINGS ARE INTENDED TO DISPLAY THE COMPLETED WORK SUBSTANTIALLY AS CONSTRUCTED. THEY ARE BASED ON DATA PROVIDED TO THE ENGINEER, AND CERTIFIED BY, A REGISTERED PROFESSIONAL SURVEYOR AND MAPPER. FIELD VERIFICATION OF CONDITIONS AND LOCATIONS SHOULD BE UNDERTAKEN PRIOR TO ALTERATION OR CONSTRUCTION IN THE PROJECT AREA. 01/07/03

NOTE: RECORD PAVEMENT ELEVATIONS ARE FOR 1ST LIFT OF ASPHALT ONLY.

3	WATER AND SEWER ONLY (PHASE 2A)	08/20/06
2	PAVING, GRADING, AND DRAINAGE (PHASE 2A)	10/05/06
1	WATER AND SEWER ONLY (PHASE 2B)	12/14/06
1	PAVING, GRADING, AND DRAINAGE (PHASE 2B-1)	12/14/06

REV NO.	REVISION	DATE	DRAWN BY / EMP. NO.	CHECKED BY / EMP. NO.
11	REVISED UTILITIES CONVEYANCE PER ENGINEER COMMENTS	1/18/07	RRM/1482	
10	REVISED FOR UTILITIES CONVEYANCE	12/14/06	MPO/2348	
9	RECORD DRAWING REVISION – PAVING, GRADING, AND DRAINAGE – PHASE 2A	10/25/06	MPO/2348	
7	RECORD DRAWING REVISION – WATER AND SEWER ONLY – PHASE 2A	8/14/06	MPO/2348	
4	REVISED FOR INSUBSTANTIAL CHANGE	5/4/06	RRM/1482	
3	REVISED PER FDEP AND PER ENGINEER	3/22/06	RRM/1482	
2	REVISED PER ENGINEER & COUNTY COMMENTS	11/29/05	RRM/1482	
1	REVISED PER COLLIER COUNTY COMMENTS	9/28/05	RRM/1482	

Feb 07, 2008 – 14:51:46 TDASILVA(X:\ENG\N0442\150-QuarryPhase2\Rev14-rcrdPaving&Drainage\04421501 7.dwg

ACTIVITY	INITIALS/EMP. NO.	DATE
DESIGNED BY:	LMG/894	4/15/05
DRAWN BY:	RRM/1482	4/15/05
CHECKED BY:		
CONTRACT ADMIN. BY:		
WM APPROVED BY:		

WilsonMiller

Planners · Engineers · Ecologists · Surveyors · Landscape Architects · Transportation Consultants

WilsonMiller, Inc.

Naples · Fort Myers · Sarasota · Bradenton · Tampa · Tallahassee

4571 Colonial Boulevard, Suite 100 · Fort Myers, Florida 33912 · Phone 239-939-1020 · Fax 239-939-3412 · Web-Site www.wilsonmiller.com

WilsonMiller, Inc. – FL Lic # LC-0000170
WilsonMiller, Inc. – Certificate of Authorization #43

CLIENT: CENTEX HOMES

PROJECT: THE QUARRY PHASE 2

DATE: FEB 2005
HORIZONTAL SCALE: 1" = 40'
VERTICAL SCALE: 1" = 4'
SEC: 14, 23 TWP: 48S RGE: 26E

TITLE: PLAN AND PROFILE
NICKEL RIDGE CIRCLE
STA. 0+00 TO 11+00

CROSS REFERENCE FILE NO.: D-0442-48
PROJECT NUMBER: N0442-509-000

LISA M. GIORDANO
LICENSE # 59318
INDEX NUMBER: D-0442-150
SHEET NUMBER: 17 OF 38

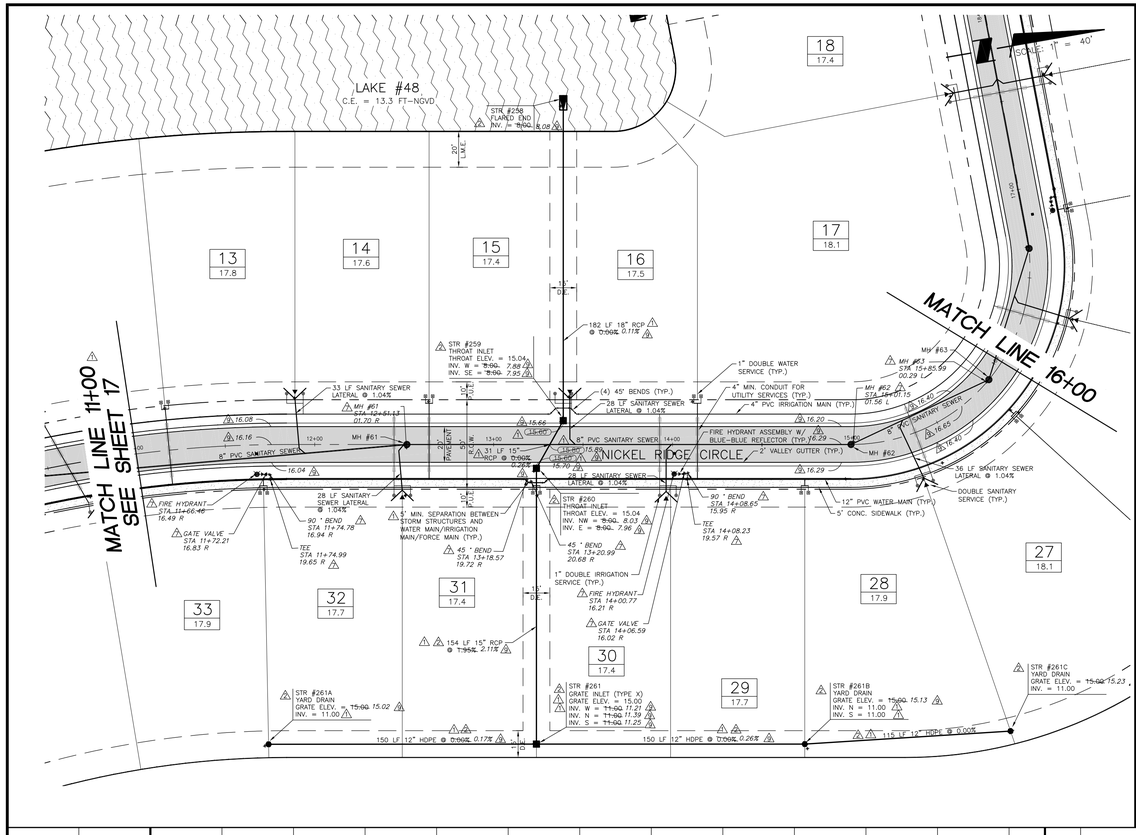

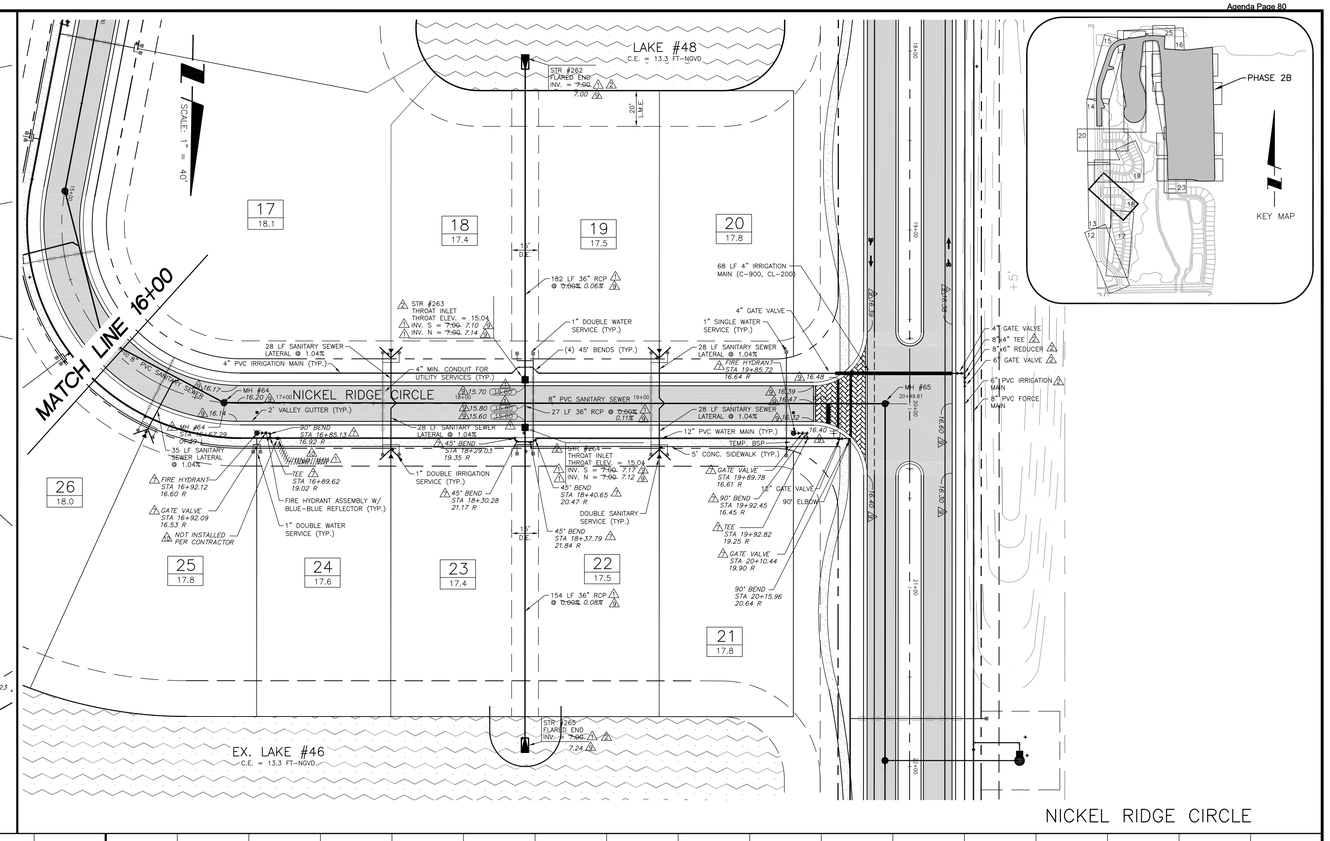

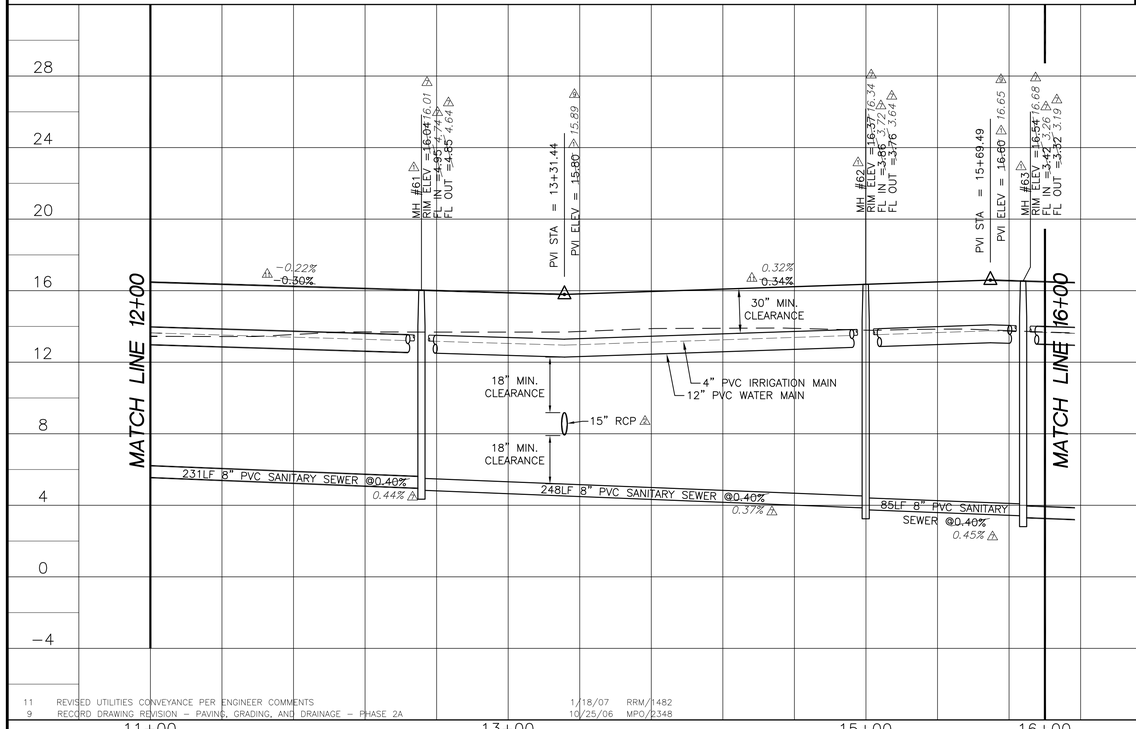

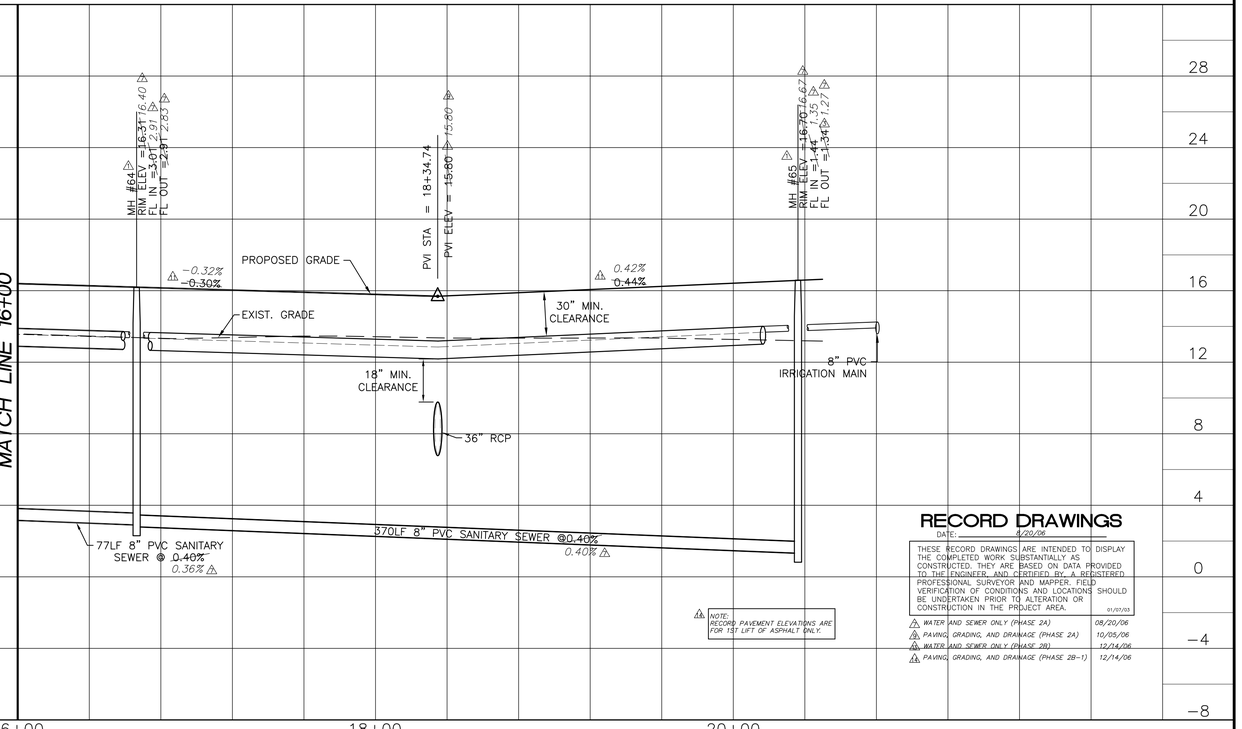

NOTE:
RECORD PAVEMENT ELEVATIONS ARE FOR 1ST LIFT OF ASPHALT ONLY.

RECORD DRAWINGS

DATE: 4/20/06

THESE RECORD DRAWINGS ARE INTENDED TO DISPLAY THE COMPLETED WORK SUBSTANTIALLY AS CONSTRUCTED. THEY ARE BASED ON DATA PROVIDED TO THE ENGINEER, AND CERTIFIED BY, A REGISTERED PROFESSIONAL SURVEYOR AND MAPPER. FIELD VERIFICATION OF CONDITIONS AND LOCATIONS SHOULD BE UNDERTAKEN PRIOR TO ALTERATION OR CONSTRUCTION IN THE PROJECT AREA. 01/07/03

1 WATER AND SEWER ONLY (PHASE 2A)	08/20/06
2 PAVING, GRADING, AND DRAINAGE (PHASE 2A)	10/05/06
3 WATER AND SEWER ONLY (PHASE 2B)	12/14/06
4 PAVING, GRADING, AND DRAINAGE (PHASE 2B-1)	12/14/06

REV NO.	REVISION	DATE	DRAWN BY / EMP. NO.	CHECKED BY / EMP. NO.
11	REVISED UTILITIES CONVEYANCE PER ENGINEER COMMENTS	1/18/07	RRM/1482	
9	RECORD DRAWING REVISION – PAVING, GRADING, AND DRAINAGE – PHASE 2A	10/25/06	MPO/2348	
7	RECORD DRAWING REVISION – WATER AND SEWER ONLY – PHASE 2A	8/14/06	MPO/2348	
4	REVISED FOR INSUBSTANTIAL CHANGE	5/4/06	RRM/1482	
3	REVISED PER FDEP COMMENTS AND PER ENGINEER	3/22/06	RRM/1482	
2	REVISED PER ENGINEER & COUNTY COMMENTS	11/29/05	RRM/1482	
1	REVISED PER COLLIER COUNTY COMMENTS	9/28/05	RRM/1482	

Feb 07, 2008 – 14:48:37 TDASILVA(X:\ENG\N0442\150-QuarryPhase2\Rev14-rcrdPaving&Drainage\044215018.dwg

ACTIVITY	INITIALS/EMP. NO.	DATE
DESIGNED BY:	LMG/894	4/15/04
DRAWN BY:	RRM/1482	4/15/05
CHECKED BY:		
CONTRACT ADMIN. BY:		
WM APPROVED BY:		

WilsonMiller
WilsonMiller, Inc. – FL Lic # LC-0000170
WilsonMiller, Inc. – Certificate of Authorization #43
Planners - Engineers - Ecologists - Surveyors - Landscape Architects - Transportation Consultants
WilsonMiller, Inc.
Naples - Fort Myers - Sarasota - Bradenton - Tampa - Tallahassee
4571 Colonial Boulevard, Suite 100 - Fort Myers, Florida 33912 - Phone 239-939-1020 - Fax 239-939-3412 - Web-Site www.wilsonmiller.com

CLIENT: CENTEX HOMES

PROJECT: THE QUARRY PHASE 2

DATE: FEB 2005
HORIZONTAL SCALE: 1" = 40'
VERTICAL SCALE: 1" = 4'
SEC: 14, 23 TWP: 48S RGE: 26E

TITLE: PLAN AND PROFILE
NICKEL RIDGE CIRCLE
STA. 11+00 TO END

CROSS REFERENCE FILE NO.: D-0442-48
PROJECT NUMBER: N0442-509-000

LISA M. GIORDANO
LICENSE # 59318

INDEX NUMBER: D-0442-150

SHEET NUMBER: 18 OF 38

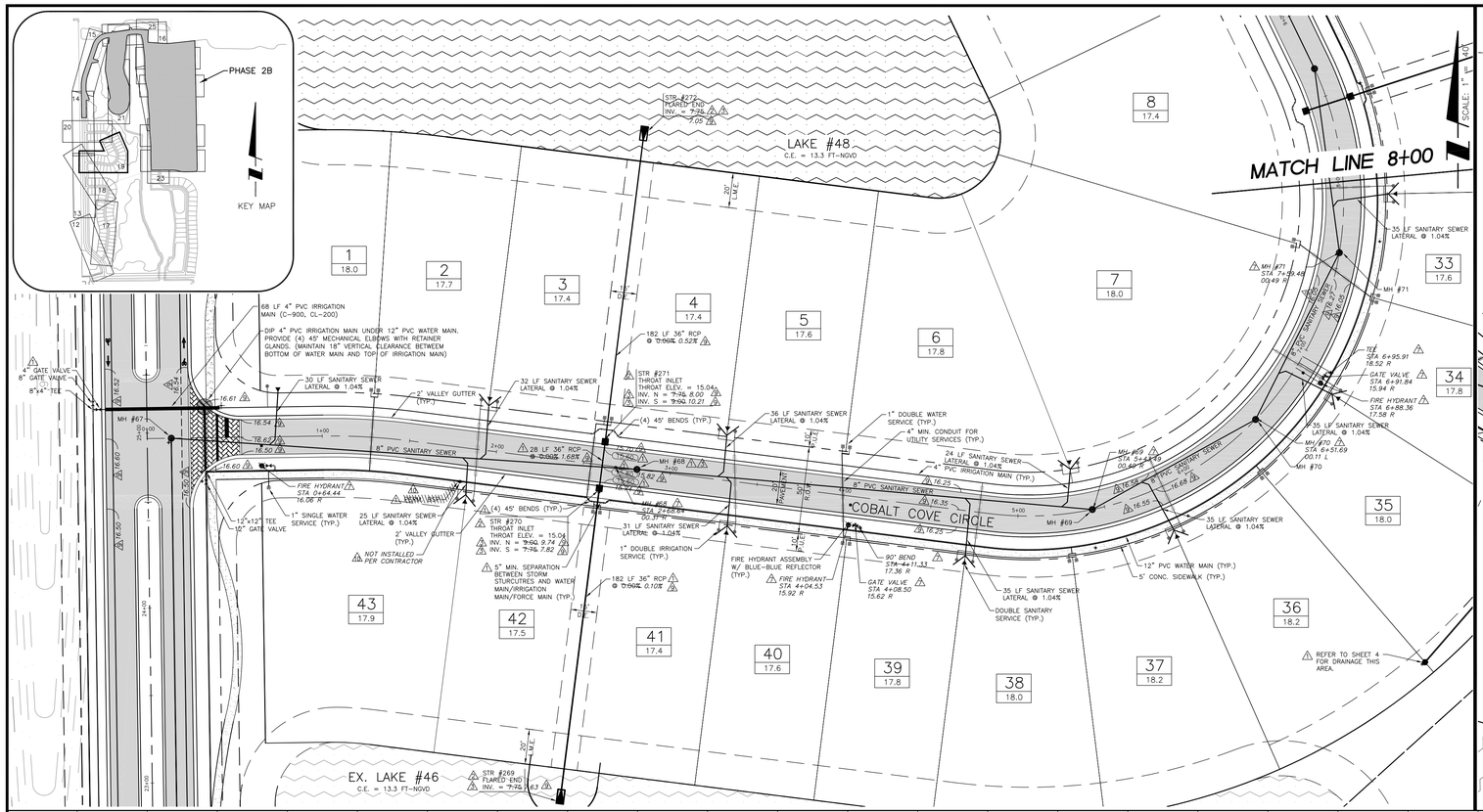

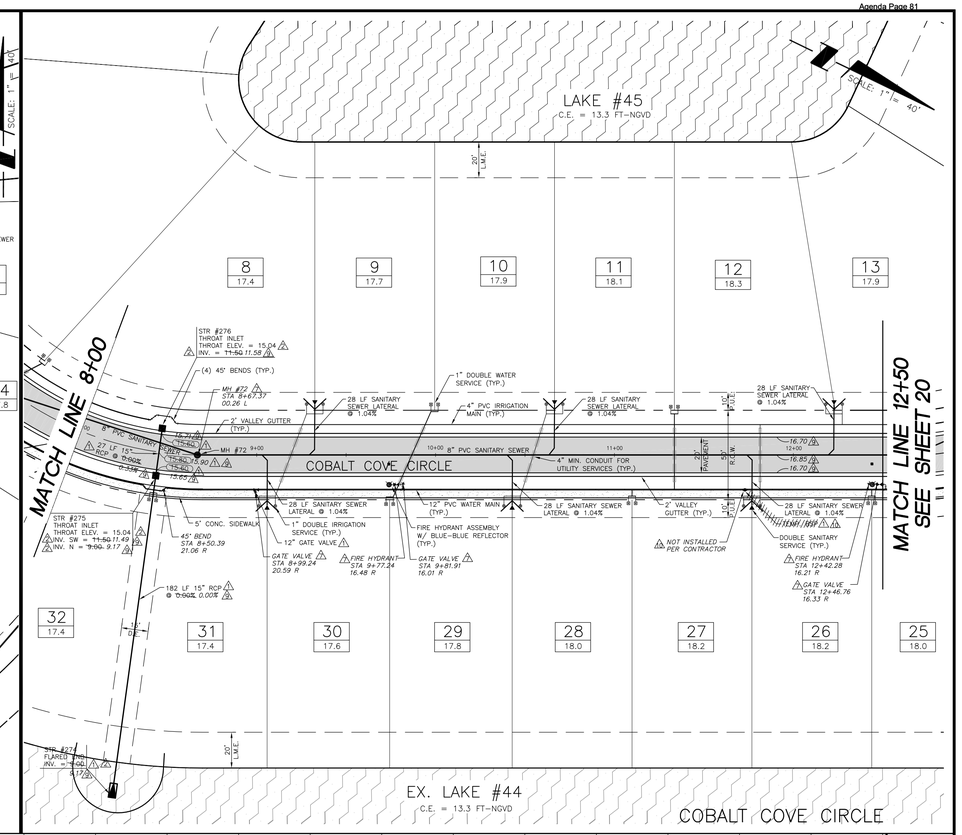

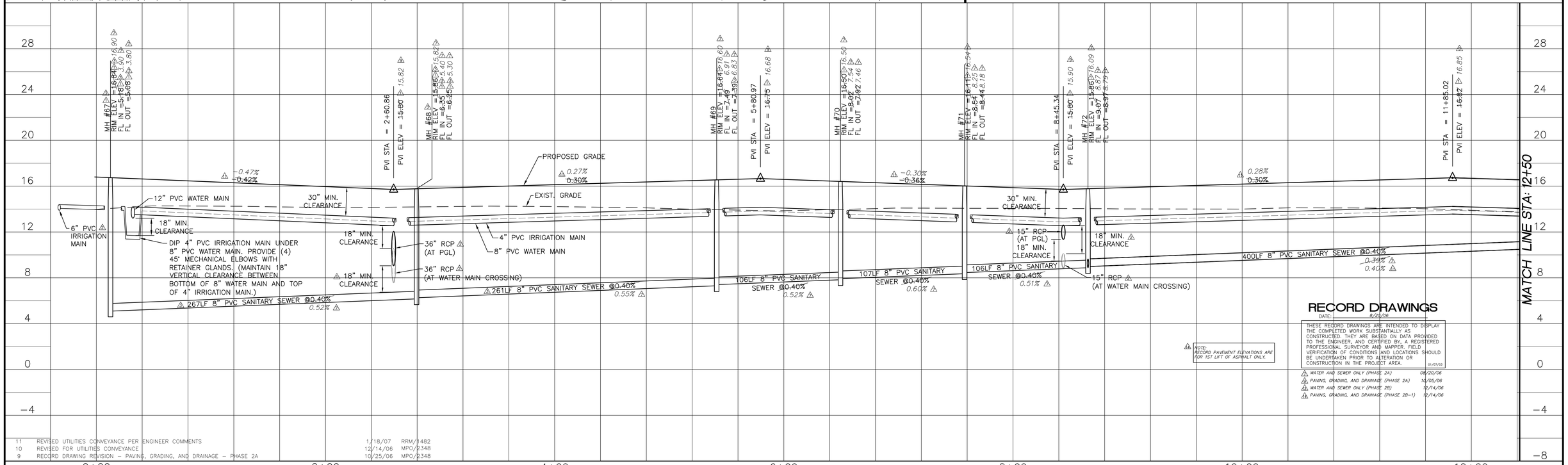

NOTE: RECORD PAVEMENT ELEVATIONS ARE FOR 1ST LIFT OF ASPHALT ONLY.

RECORD DRAWINGS

DATE: 8/29/06

THESE RECORD DRAWINGS ARE INTENDED TO DISPLAY THE COMPLETED WORK SUBSTANTIALLY AS CONSTRUCTED. THEY ARE BASED ON DATA PROVIDED TO THE ENGINEER, AND CERTIFIED BY, A REGISTERED PROFESSIONAL SURVEYOR AND MAPPER. FIELD VERIFICATION OF CONDITIONS AND LOCATIONS SHOULD BE UNDERTAKEN PRIOR TO ALTERATION OR CONSTRUCTION IN THE PROJECT AREA. 01/07/03

WATER AND SEWER ONLY (PHASE 2A) 08/22/06
PAVING, GRADING, AND DRAINAGE (PHASE 2A) 10/05/06
WATER AND SEWER ONLY (PHASE 2B) 12/14/06
PAVING, GRADING, AND DRAINAGE (PHASE 2B-1) 12/14/06

11	REVISED UTILITIES CONVEYANCE PER ENGINEER COMMENTS	1/18/07	RRM/1482
10	REVISED FOR UTILITIES CONVEYANCE	12/14/06	MPO/2348
9	RECORD DRAWING REVISION – PAVING, GRADING, AND DRAINAGE – PHASE 2A	10/25/06	MPO/2348
7	RECORD DRAWING REVISION – WATER AND SEWER ONLY – PHASE 2A	8/14/06	MPO/2348
4	REVISED FOR INSUBSTANTIAL CHANGE	5/4/06	RRM/1482
3	REVISED PER FDEP COMMENTS AND PER ENGINEER	3/22/06	RRM/1482
2	REVISED PER ENGINEER & COUNTY COMMENTS	11/29/05	RRM/1482
1	REVISED PER COLLIER COUNTY COMMENTS	9/28/05	RRM/1482
△REV	DATE	DRAWN BY / EMP. NO.	CHECKED BY / EMP. NO.

Nov 19, 2007 REVISION 4-29 RMARTENS(X:\ENG\N0442\150-Quarry Phase 2\Rev13 Rcrd Water and Sewer Phase 2B\044215019.dwg

ACTIVITY	INITIALS/EMP. NO.	DATE
DESIGNED BY:	LMG/894	4/15/05
DRAWN BY:	RRM/1482	4/15/05
CHECKED BY:		
CONTRACT ADMIN. BY:		
WM APPROVED BY:		

WilsonMiller

Planners - Engineers - Ecologists - Surveyors - Landscape Architects - Transportation Consultants

WilsonMiller, Inc.
Naples - Fort Myers - Sarasota - Bradenton - Tampa - Tallahassee
4571 Colonial Boulevard, Suite 100 - Fort Myers, Florida 33912 - Phone 239-939-1020 - Fax 239-939-3412 - Web-Site www.wilsonmiller.com

WilsonMiller, Inc. – FL Lic # LC-0000170
WilsonMiller, Inc. – Certificate of Authorization #43

CLIENT: CENTEX HOMES

PROJECT: THE QUARRY PHASE 2

DATE: FEB 2005
HORIZONTAL SCALE: 1" = 40'
VERTICAL SCALE: 1" = 4'
SEC: 14, 23 TWP: 48S RGE: 26E
CROSS REFERENCE FILE NO.: D-0442-48

TITLE: PLAN AND PROFILE
COBALT COVE CIRCLE
STA. 0+00 TO STA. 12+50

PROJECT NUMBER: N0442-509-000

LISA M. GIORDANO LICENSE # 59318

INDEX NUMBER: D-0442-150

SHEET NUMBER: 19 OF 38

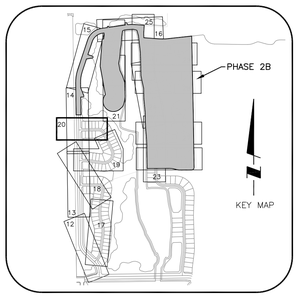

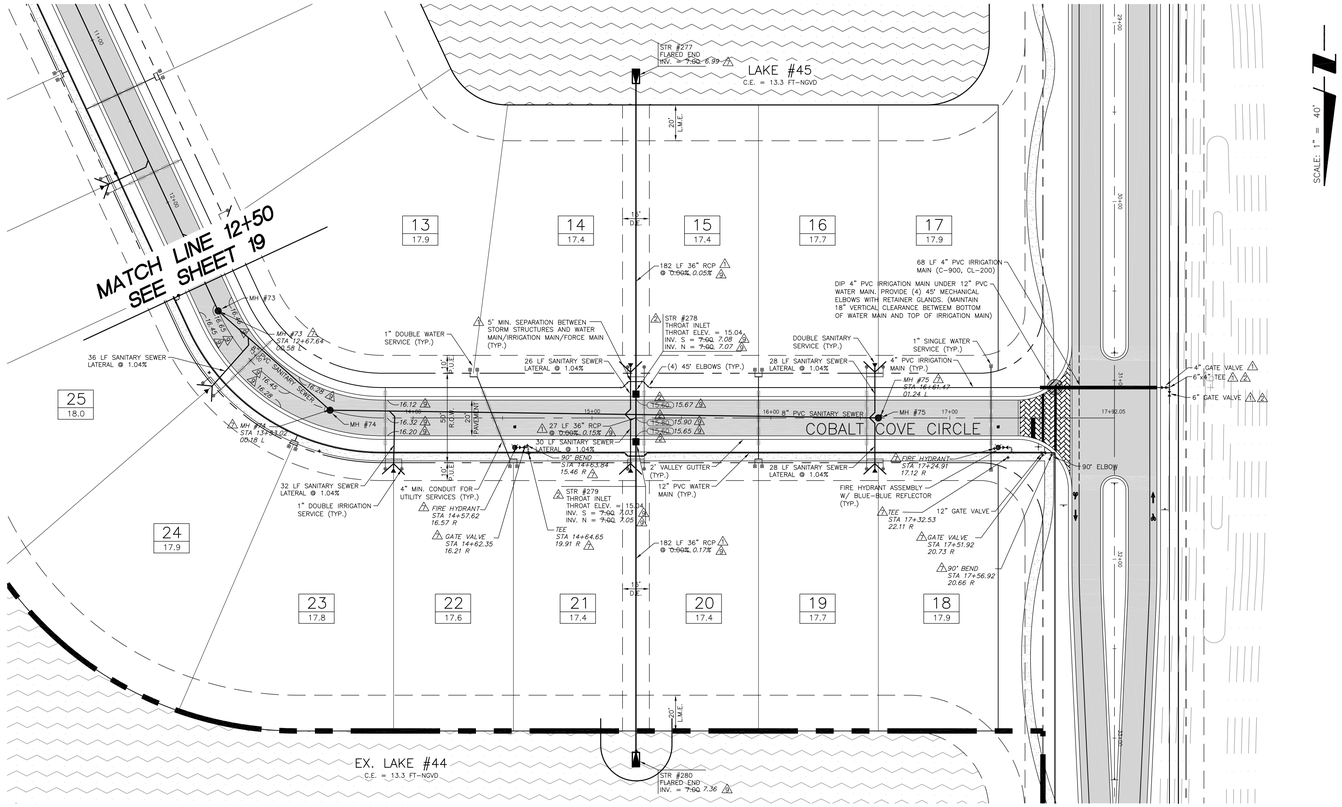

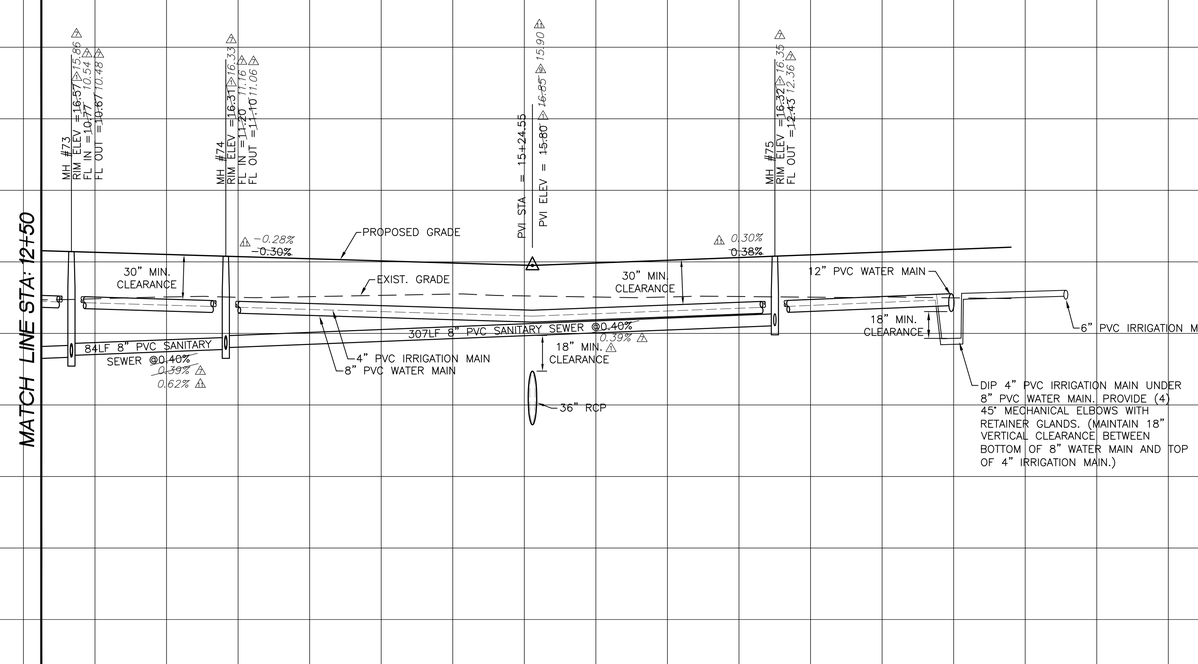

COBALT COVE CIRCLE

NOTE: RECORD PAVEMENT ELEVATIONS ARE FOR 1ST LIFT OF ASPHALT ONLY.

RECORD DRAWINGS
DATE: 8/20/06

THESE RECORD DRAWINGS ARE INTENDED TO DISPLAY THE COMPLETED WORK SUBSTANTIALLY AS CONSTRUCTED. THEY ARE BASED ON DATA PROVIDED TO THE ENGINEER, AND CERTIFIED BY, A REGISTERED PROFESSIONAL SURVEYOR AND MAPPER. FIELD VERIFICATION OF CONDITIONS AND LOCATIONS SHOULD BE UNDERTAKEN PRIOR TO ALTERATION OR CONSTRUCTION IN THE PROJECT AREA. 01/07/03

WATER AND SEWER ONLY (PHASE 2A) 08/20/06
PAVING, GRADING, AND DRAINAGE (PHASE 2A) 10/05/06
WATER AND SEWER ONLY (PHASE 2B) 12/14/06
PAVING, GRADING, AND DRAINAGE (PHASE 2B-1) 12/14/06

REV NO.	REVISION	DATE	DRAWN BY / EMP. NO.	CHECKED BY / EMP. NO.
11	REVISED UTILITIES CONVEYANCE PER ENGINEER COMMENTS	1/18/07	RRM/1482	
9	RECORD DRAWING REVISION – PAVING, GRADING, AND DRAINAGE – PHASE 2A	10/25/06	MPO/2348	
7	RECORD DRAWING REVISION – WATER AND SEWER ONLY	8/14/06	MPO/2348	
4	REVISED FOR INSUBSTANTIAL CHANGE	5/4/06	RRM/1482	
2	REVISED PER ENGINEER & COUNTY COMMENTS	11/29/05	RRM/1482	
1	REVISED PER COLLIER COUNTY COMMENTS	9/28/05	RRM/1482	

Feb 07, 2008 – 17:55:37 TDASILVAIX:\ENG\N0442\150-QuarryPhase2\Rev14-rcrdPaving&Drainage\044215020.dwg

ACTIVITY	INITIALS/EMP. NO.	DATE
DESIGNED BY:	LMG/894	4/15/05
DRAWN BY:	RRM/1482	4/15/05
CHECKED BY:		
CONTRACT ADMIN. BY:		
WM APPROVED BY:		

WilsonMiller
WilsonMiller, Inc. – FL LB # LC-C000170
WilsonMiller, Inc. – Certificate of Authorization #43
Planners - Engineers - Ecologists - Surveyors - Landscape Architects - Transportation Consultants
WilsonMiller, Inc.
Naples - Fort Myers - Sarasota - Bradenton - Tampa - Tallahassee
4571 Colonial Boulevard, Suite 100 - Fort Myers, Florida 33912 - Phone 239-939-1020 - Fax 239-939-3412 - Web-Site www.wilsonmiller.com

CLIENT: CENTEX HOMES
PROJECT: THE QUARRY PHASE 2

DATE: FEB 2005
HORIZONTAL SCALE: 1" = 40'
VERTICAL SCALE: 1" = 4'
SEC: 14, 23 TWP: 48S RGE: 26E
CROSS REFERENCE FILE NO.: D-0442-48

TITLE: PLAN AND PROFILE
COBALT COVE CIRCLE
STA. 12+50 TO END

PROJECT NUMBER: N0442-509-000

LISA M. GIORDANO
LICENSE # 59318
INDEX NUMBER: D-0442-150
SHEET NUMBER: 20 OF 38

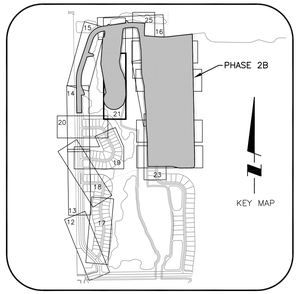

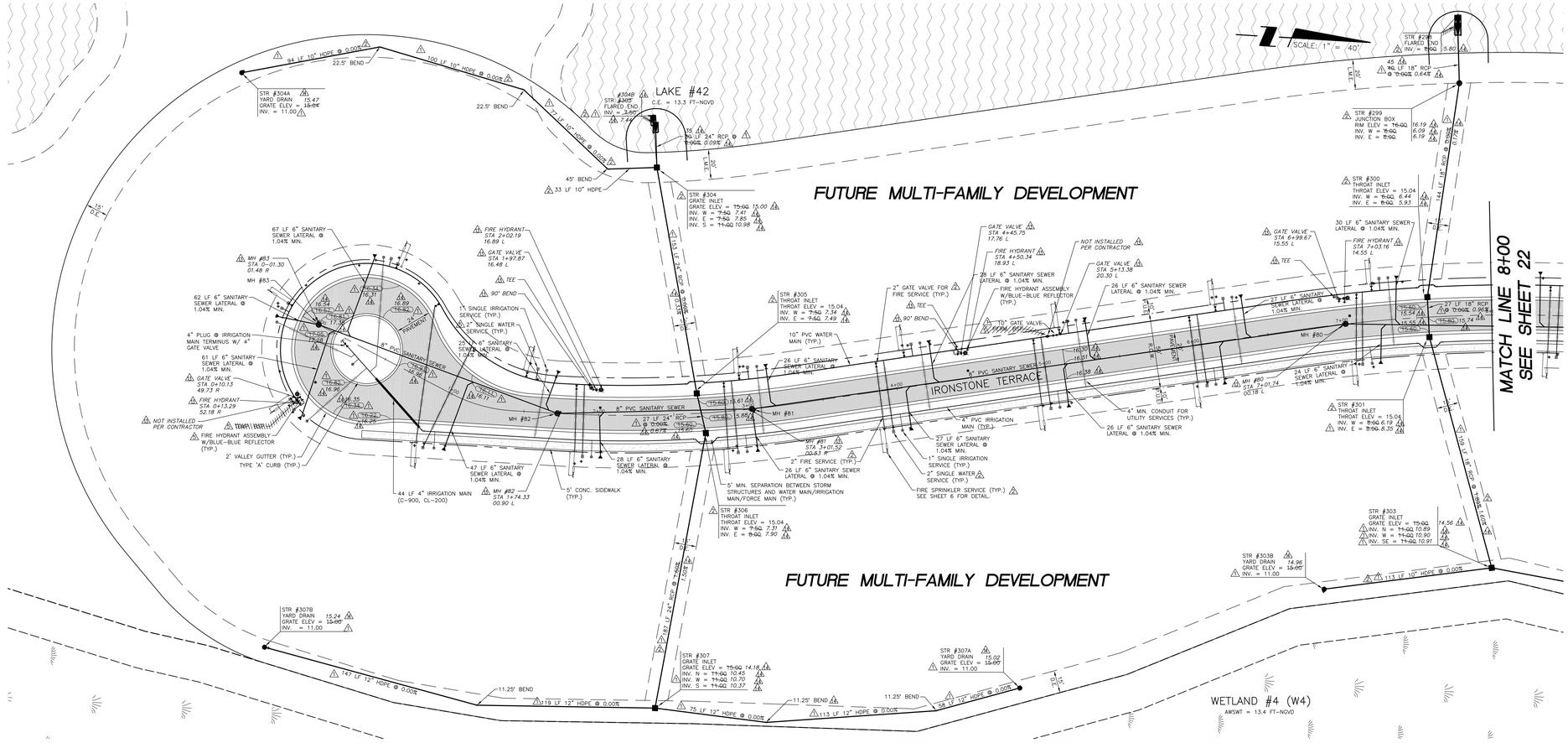

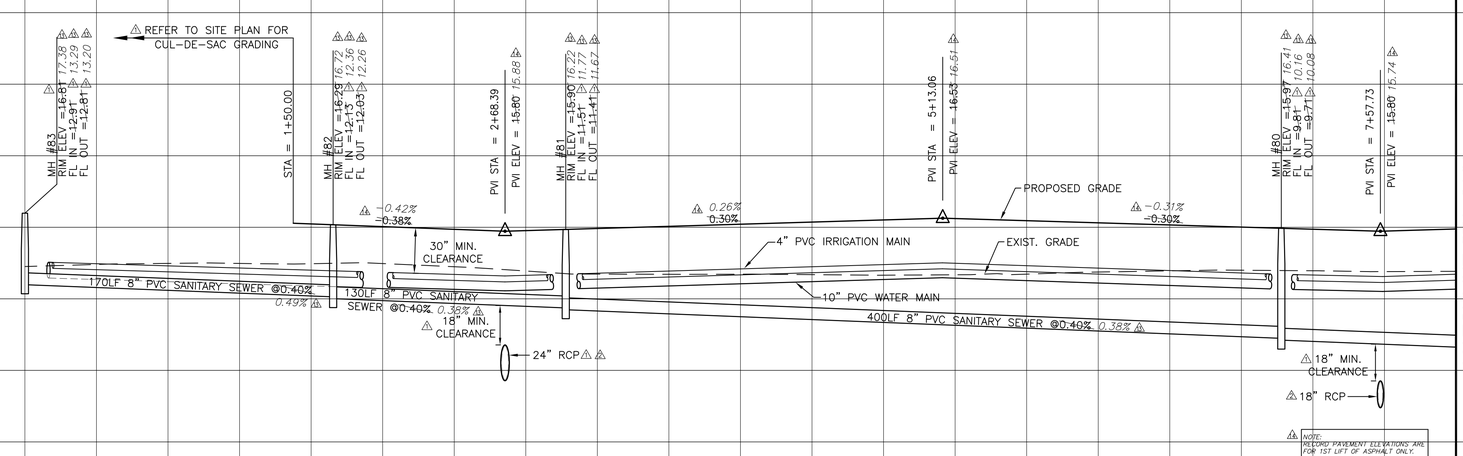

MATCHLINE STA: 8+00

RECORD DRAWINGS

DATE: 8/20/06

THESE RECORD DRAWINGS ARE INTENDED TO DISPLAY THE COMPLETED WORK SUBSTANTIALLY AS CONSTRUCTED. THEY ARE BASED ON DATA PROVIDED TO THE ENGINEER, AND CERTIFIED BY, A REGISTERED PROFESSIONAL SURVEYOR AND MAPPER. FIELD VERIFICATION OF CONDITIONS AND LOCATIONS SHOULD BE UNDERTAKEN PRIOR TO ALTERATION OR CONSTRUCTION IN THE PROJECT AREA. 01/07/03

WATER AND SEWER ONLY (PHASE 2A)	08/20/06
PAVING, GRADING, AND DRAINAGE (PHASE 2A)	10/05/06
WATER AND SEWER ONLY (PHASE 2B)	12/14/06
PAVING, GRADING, AND DRAINAGE (PHASE 2B-1)	12/14/06

REV NO.	REVISION	DATE	DRAWN BY / EMP. NO.	CHECKED BY / EMP. NO.
14	RECORD DRAWING REVISION – PAVING, GRADING, AND DRAINAGE – PHASE 2B	12/14/06	MPO/2348	
13	RECORD DRAWING REVISION – WATER AND SEWER ONLY – PHASE 2B	12/14/06	MPO/2348	
10	REVISED FOR UTILITIES CONVEYANCE	12/14/06	MPO/2348	
5	REVISED PER ENGINEER & OWNER	6/3/06	RRM/1482	
2	REVISED PER ENGINEER & COUNTY COMMENTS	11/29/05	RRM/1482	
1	REVISED PER COLLIER COUNTY COMMENTS	9/28/05	RRM/1482	

Feb 19, 2008 – 13:55:51 TDASILVA(X:\ENG\N0442\150-QuarryPhase2\Rev14-rcrdPaving&Drainage\044215021.dwg

ACTIVITY	INITIALS/EMP. NO.	DATE
DESIGNED BY:	LMG/894	4/15/05
DRAWN BY:	RRM/1482	4/15/05
CHECKED BY:		
CONTRACT ADMIN. BY:		
WM APPROVED BY:		

WilsonMiller
Planners · Engineers · Ecologists · Surveyors · Landscape Architects · Transportation Consultants
WilsonMiller, Inc.
Naples · Fort Myers · Sarasota · Bradenton · Tampa · Tallahassee
4571 Colonial Boulevard, Suite 100 · Fort Myers, Florida 33912 · Phone 239-939-1020 · Fax 239-939-3412 · Web-Site www.wilsonmiller.com
WilsonMiller, Inc. – FL Lic# LC-0000170
WilsonMiller, Inc. – Certificate of Authorization #45

PROJECT: CENTEX HOMES
THE QUARRY
PHASE 2

DATE: FEB 2005
HORIZONTAL SCALE: 1" = 40'
VERTICAL SCALE: 1" = 4'
SEC: 14, TWP: 48S, RGE: 26E
CROSS REFERENCE FILE NO.: D-0442-48

TITLE: PLAN AND PROFILE
IRONSTONE TERRACE
STA. 0+00 TO STA. 8+00

PROJECT NUMBER: N0442-509-000

LISA M. GIORDANO
LICENSE # 59318

INDEX NUMBER: D-0442-150

SHEET NUMBER: 21 OF 38

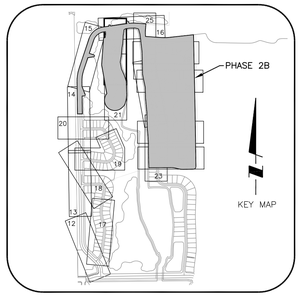

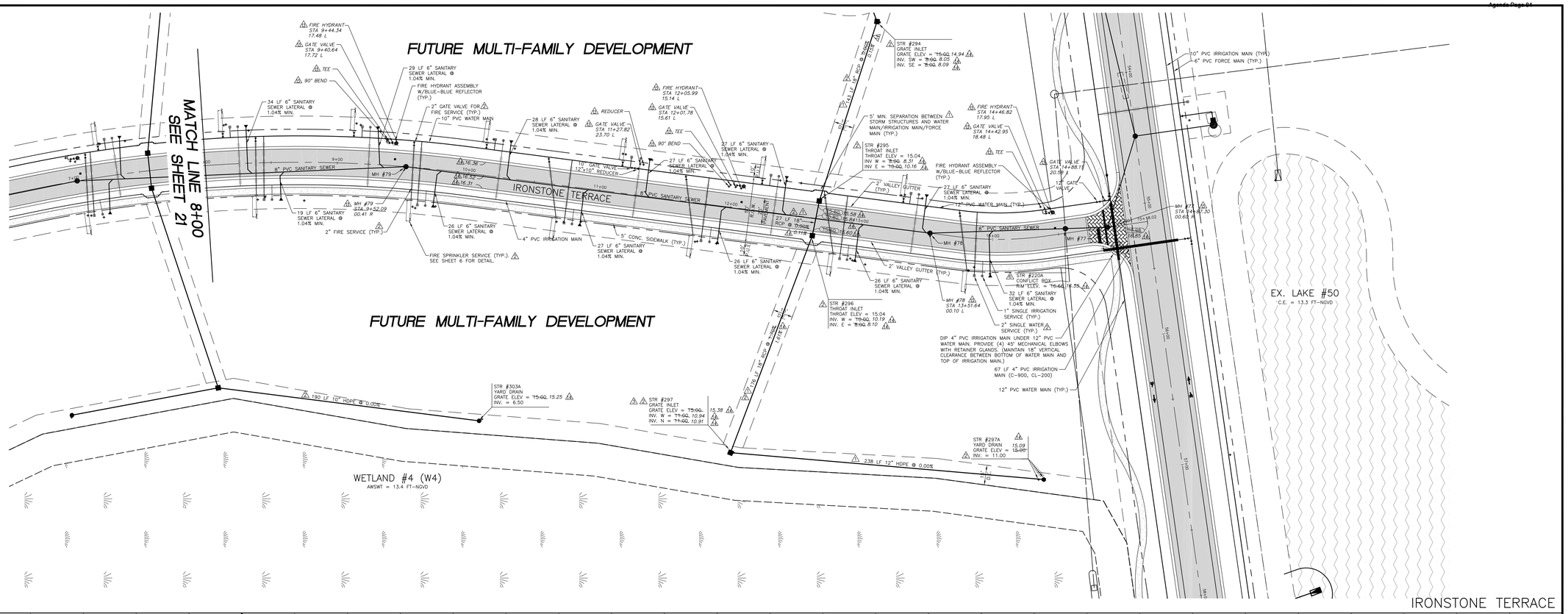

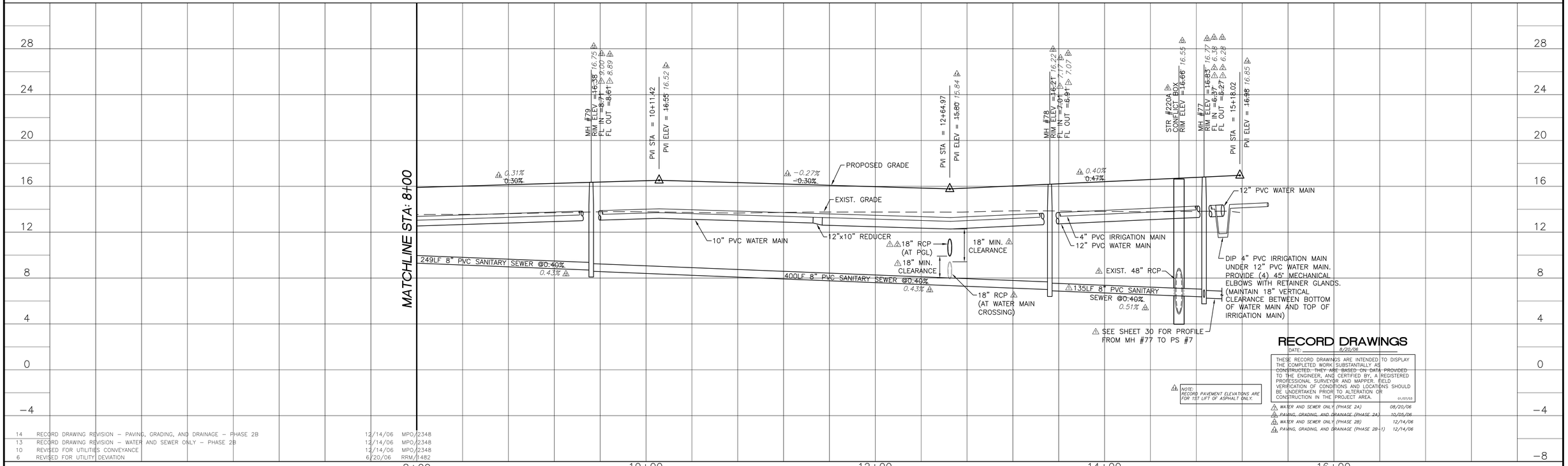

NOTE:
RECORD PAVEMENT ELEVATIONS ARE FOR 1ST LIFT OF ASPHALT ONLY.

RECORD DRAWINGS

DATE: 8/20/06

THESE RECORD DRAWINGS ARE INTENDED TO DISPLAY THE COMPLETED WORK SUBSTANTIALLY AS CONSTRUCTED. THEY ARE BASED ON DATA PROVIDED TO THE ENGINEER, AND CERTIFIED BY, A REGISTERED PROFESSIONAL SURVEYOR AND MAPPER. FIELD VERIFICATION OF CONDITIONS AND LOCATIONS SHOULD BE UNDERTAKEN PRIOR TO ALTERATION OR CONSTRUCTION IN THE PROJECT AREA. 01/07/03

1	WATER AND SEWER ONLY (PHASE 2A)	08/20/06
2	PAVING, GRADING, AND DRAINAGE (PHASE 2A)	10/05/06
3	WATER AND SEWER ONLY (PHASE 2B)	12/14/06
4	PAVING, GRADING, AND DRAINAGE (PHASE 2B-1)	12/14/06

△REV NO.	REVISION	DATE	DRAWN BY / EMP. NO.	CHECKED BY / EMP. NO.
14	RECORD DRAWING REVISION – PAVING, GRADING, AND DRAINAGE – PHASE 2B	12/14/06	MPO/2348	
13	RECORD DRAWING REVISION – WATER AND SEWER ONLY – PHASE 2B	12/14/06	MPO/2348	
10	REVISED FOR UTILITIES CONVEYANCE	12/14/06	MPO/2348	
6	REVISED FOR UTILITY DEVIATION	6/20/06	RRM/1482	
5	REVISED PER ENGINEER & OWNER	6/3/06	RRM/1482	
4	REVISED FOR INSUBSTANTIAL CHANGE	5/4/06	RRM/1482	
3	REVISED PER FDEP COMMENTS AND PER ENGINEER	3/22/06	RRM/1482	
2	REVISED PER ENGINEER & COUNTY COMMENTS	11/29/05	RRM/1482	
1	REVISED PER COLLIER COUNTY COMMENTS	9/28/05	RRM/1482	

Feb 19, 2008 – 14:04:35 TDASILVA(X:\ENG\N0442\150-QuarryPhase2\Rev14-rcrdPaving&Drainage\04421502 2.dwg

ACTIVITY	INITIALS/EMP. NO.	DATE
DESIGNED BY:	LMG/894	4/15/05
DRAWN BY:	RRM/1482	4/15/05
CHECKED BY:		
CONTRACT ADMIN. BY:		
WM APPROVED BY:		

WilsonMiller
Planners · Engineers · Ecologists · Surveyors · Landscape Architects · Transportation Consultants
WilsonMiller, Inc.
Naples · Fort Myers · Sarasota · Bradenton · Tampa · Tallahassee
4571 Colonial Boulevard, Suite 100 · Fort Myers, Florida 33912 · Phone 239-939-1020 · Fax 239-939-3412 · Web-Site www.wilsonmiller.com
WilsonMiller, Inc. – FL Lic # LC-0000170
WilsonMiller, Inc. – Certificate of Authorization #43

CLIENT: CENTEX HOMES
PROJECT: THE QUARRY PHASE 2

DATE: FEB 2004
HORIZONTAL SCALE: 1" = 40'
VERTICAL SCALE: 1" = 4'
SEC: 14, 23 TWP: 48S RGE: 26E
CROSS REFERENCE FILE NO.: D-0442-48
PROJECT NUMBER: N0442-509-000

TITLE: PLAN AND PROFILE
IRONSTONE TERRACE
STA: 8+00 TO END

LISA M. GIORDANO
LICENSE # 59318
INDEX NUMBER: D-0442-150
SHEET NUMBER: 22 OF 38

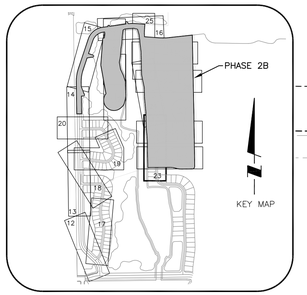

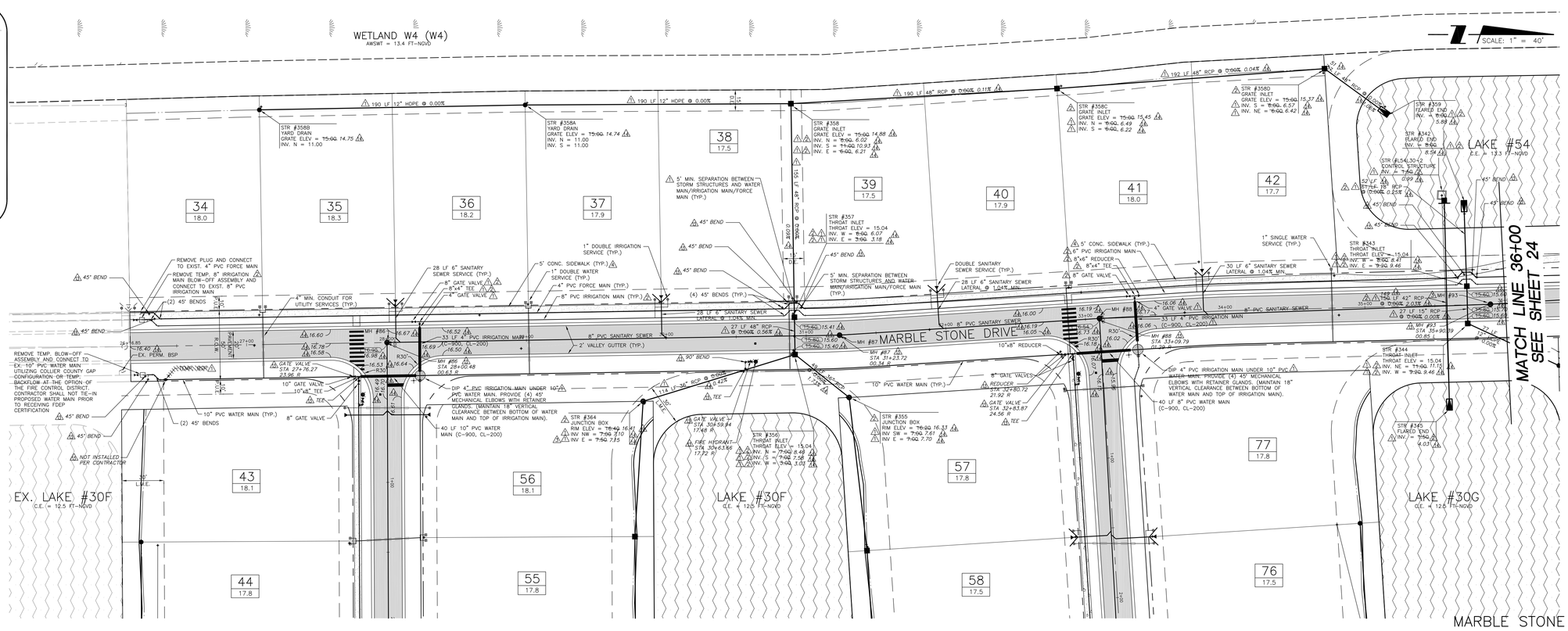

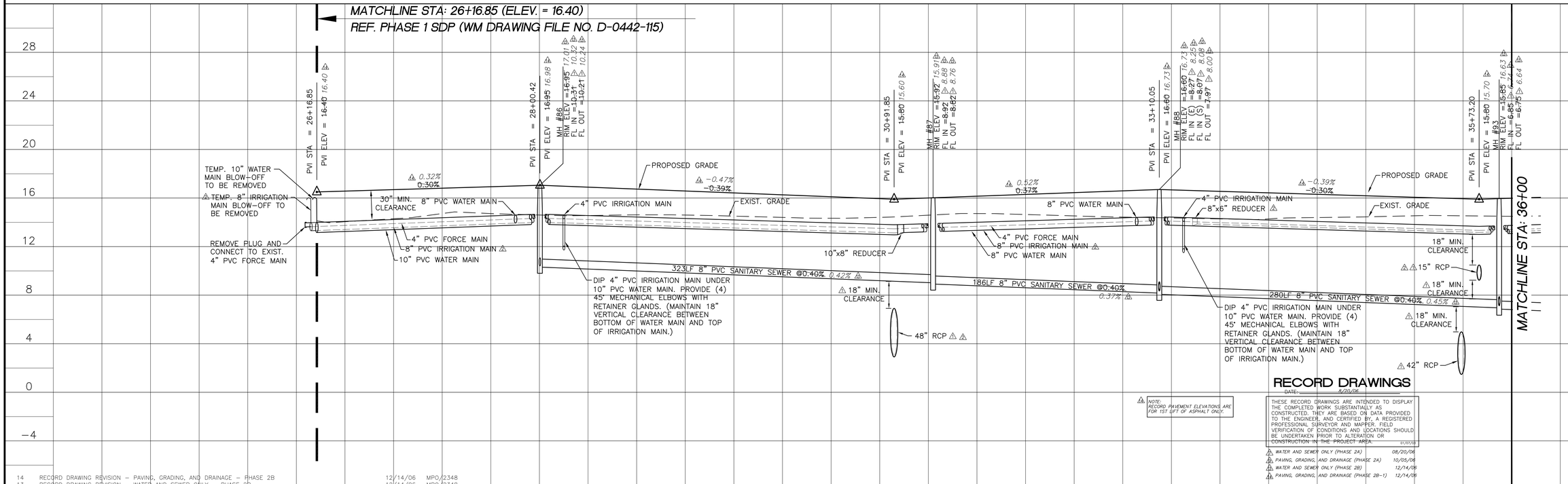

RECORD DRAWINGS
DATE: 8/20/06

NOTE: RECORD PAVEMENT ELEVATIONS ARE FOR 1ST LIFT OF ASPHALT ONLY.

THESE RECORD DRAWINGS ARE INTENDED TO DISPLAY THE COMPLETED WORK SUBSTANTIALLY AS CONSTRUCTED. THEY ARE BASED ON DATA PROVIDED TO THE ENGINEER, AND CERTIFIED BY, A REGISTERED PROFESSIONAL SURVEYOR AND MAPPER. FIELD VERIFICATION OF CONDITIONS AND LOCATIONS SHOULD BE UNDERTAKEN PRIOR TO ALTERATION OR CONSTRUCTION IN THE PROJECT AREA. 01/07/03

WATER AND SEWER ONLY (PHASE 2A) 08/20/06
PAVING, GRADING, AND DRAINAGE (PHASE 2A) 10/05/06
WATER AND SEWER ONLY (PHASE 2B) 12/14/06
PAVING, GRADING, AND DRAINAGE (PHASE 2B-1) 12/14/06

REV NO.	REVISION	DATE	DRAWN BY / EMP. NO.	CHECKED BY / EMP. NO.
14	RECORD DRAWING REVISION – PAVING, GRADING, AND DRAINAGE – PHASE 2B	12/14/06	MPO/2348	
13	RECORD DRAWING REVISION – WATER AND SEWER ONLY – PHASE 2B	12/14/06	MPO/2348	
10	REVISED FOR UTILITIES CONVEYANCE	12/14/06	MPO/2348	
4	REVISED FOR INSUBSTANTIAL CHANGE	5/4/06	RRM/1482	
3	REVISED PER FDEP COMMENTS AND PER ENGINEER	3/22/06	RRM/1482	
2	REVISED PER ENGINEER & COUNTY COMMENTS	11/29/05	RRM/1482	
1	REVISED PER COLLIER COUNTY COMMENTS	9/29/05	RRM/1482	

Feb 19, 2008 – 14:27:04 TDASILVA(X:\ENG\N0442\150-QuarryPhase2\Rev14-rrcrdPaving&Drainage\04421502 3.dwg

ACTIVITY	INITIALS/EMP. NO.	DATE
DESIGNED BY:	LMG/894	4/15/05
DRAWN BY:	RRM/1482	4/15/05
CHECKED BY:		
CONTRACT ADMIN. BY:		
WM APPROVED BY:		

WilsonMiller
Planners - Engineers - Ecologists - Surveyors - Landscape Architects - Transportation Consultants
WilsonMiller, Inc. – FL Lic # LC-0000170
WilsonMiller, Inc. – Certificate of Authorization #45
WilsonMiller, Inc.
Naples - Fort Myers - Sarasota - Bradenton - Tampa - Tallahassee
4571 Colonial Boulevard, Suite 100 - Fort Myers, Florida 33912 - Phone 239-939-1020 - Fax 239-939-3412 - Web-Site www.wilsonmiller.com

CLIENT: CENTEX HOMES
PROJECT: THE QUARRY PHASE 2

DATE: FEB 2005
HORIZONTAL SCALE: 1" = 40'
VERTICAL SCALE: 1" = 4'
SEC: 14, 23 TWP: 48S RGE: 26E
CROSS REFERENCE FILE NO.: D-0442-48

TITLE: PLAN AND PROFILE
MARBLE STONE DRIVE
STA. 26+16.85 TO STA. 36+00

PROJECT NUMBER: N0442-509-000

LISA M. GIORDANO
LICENSE # 59318

INDEX NUMBER: D-0442-150
SHEET NUMBER: 23 OF 38

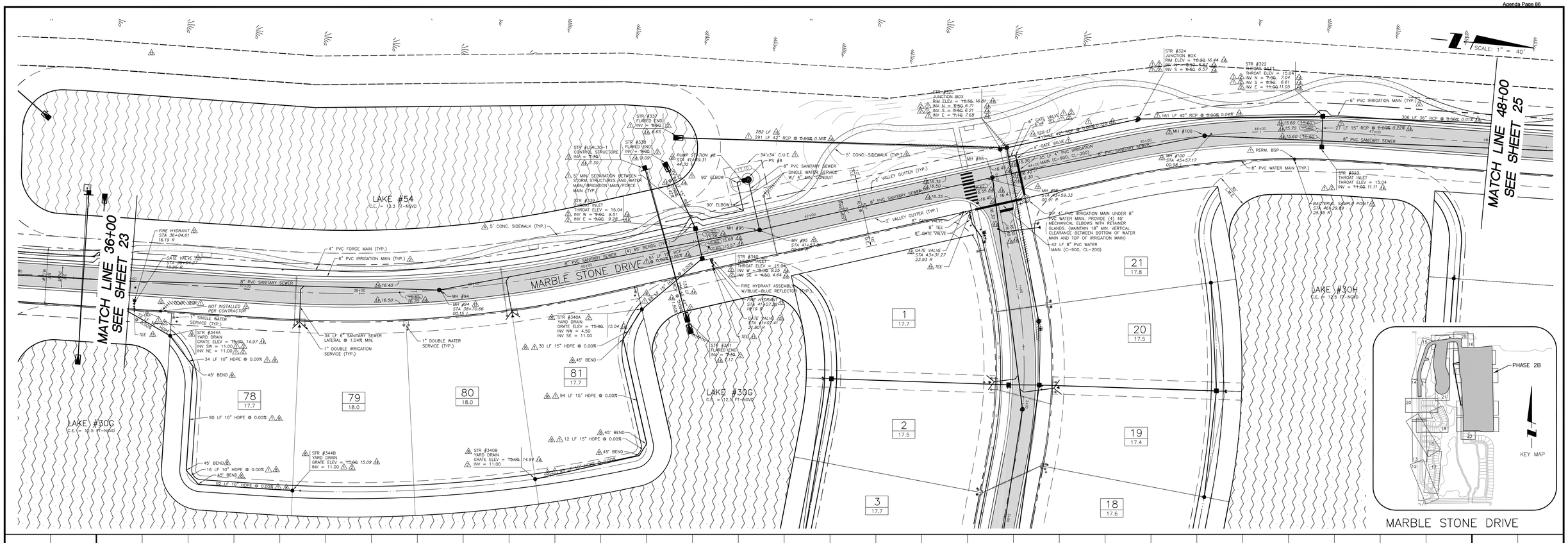

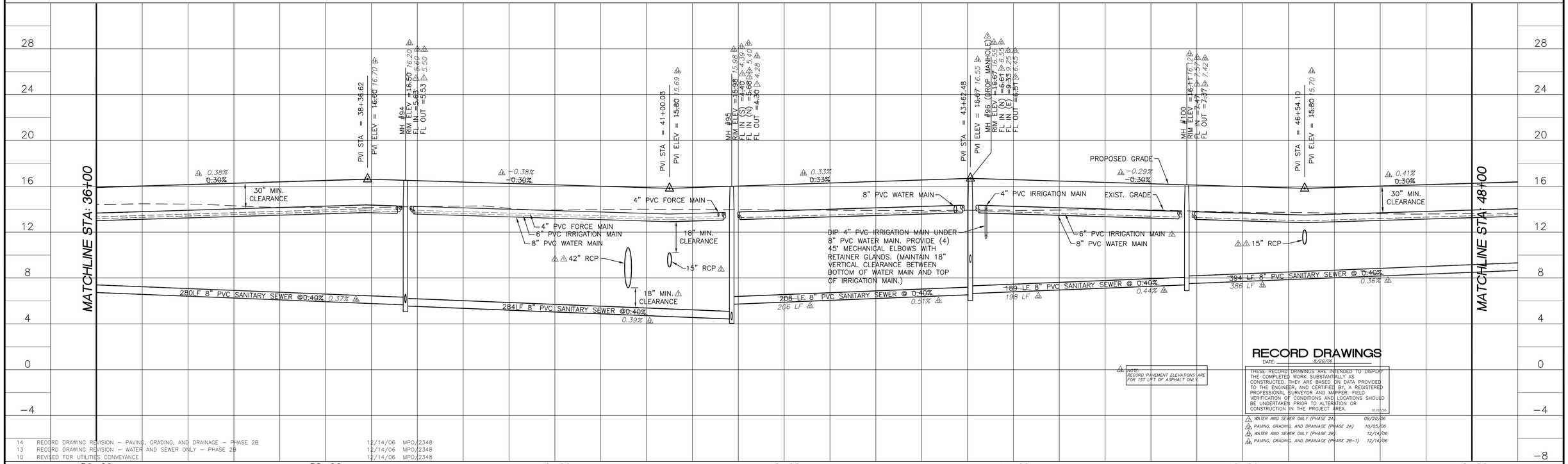

NOTE:
RECORD PAVEMENT ELEVATIONS ARE FOR 1ST LIFT OF ASPHALT ONLY.

RECORD DRAWINGS

DATE: 8/20/06

THESE RECORD DRAWINGS ARE INTENDED TO DISPLAY THE COMPLETED WORK SUBSTANTIALLY AS CONSTRUCTED. THEY ARE BASED ON DATA PROVIDED TO THE ENGINEER, AND CERTIFIED BY, A REGISTERED PROFESSIONAL SURVEYOR AND MAPPER. FIELD VERIFICATION OF CONDITIONS AND LOCATIONS SHOULD BE UNDERTAKEN PRIOR TO ALTERATION OR CONSTRUCTION IN THE PROJECT AREA. 01/03/03

1	WATER AND SEWER ONLY (PHASE 2A)	08/20/06
2	PAVING, GRADING, AND DRAINAGE (PHASE 2A)	10/05/06
3	WATER AND SEWER ONLY (PHASE 2B)	12/14/06
4	PAVING, GRADING, AND DRAINAGE (PHASE 2B-1)	12/14/06

REV NO.	REVISION	DATE	DRAWN BY / EMP. NO.	CHECKED BY / EMP. NO.
14	RECORD DRAWING REVISION – PAVING, GRADING, AND DRAINAGE – PHASE 2B	12/14/06	MPO/2348	
13	RECORD DRAWING REVISION – WATER AND SEWER ONLY – PHASE 2B	12/14/06	MPO/2348	
10	REVISED FOR UTILITIES CONVEYANCE	12/14/06	MPO/2348	
8	REVISED STORM DRAINS PER CLIENT AND ENGINEER	10/5/06	RRM/1482	
4	REVISED FOR INSUBSTANTIAL CHANGE	5/4/06	RRM/1482	
3	REVISED PER FDEP COMMENTS AND PER ENGINEER	3/22/06	RRM/1482	
2	REVISED PER ENGINEER & COUNTY COMMENTS	11/29/05	RRM/1482	
1	REVISED PER COLLIER COUNTY COMMENTS	9/29/05	RRM/1482	

Feb 26, 2008 – 15:31:07 TDASILVA(K:\ENG\N0442\150-QuarryPhase2\Rev14-rcrdPaving&Drainage\04421502 4.dwg

ACTIVITY	INITIALS/EMP. NO.	DATE
DESIGNED BY:	LMG/894	4/15/05
DRAWN BY:	RRM/1482	4/15/05
CHECKED BY:		
CONTRACT ADMIN. BY:		
WM APPROVED BY:		

WilsonMiller
Planners - Engineers - Ecologists - Surveyors - Landscape Architects - Transportation Consultants
WilsonMiller, Inc.
Naples - Fort Myers - Sarasota - Bradenton - Tampa - Tallahassee
4571 Colonial Boulevard, Suite 100 - Fort Myers, Florida 33912 - Phone 239-939-1020 - Fax 239-939-3412 - Web-Site www.wilsonmiller.com
WilsonMiller, Inc. – FL Lic # LC-0000170
WilsonMiller, Inc. – Certificate of Authorization #43

CLIENT: CENTEX HOMES

PROJECT: THE QUARRY PHASE 2

DATE: FEB 2005
HORIZONTAL SCALE: 1" = 40'
VERTICAL SCALE: 1" = 4'
SEC: 14, 23 TWP: 48S RGE: 26E

TITLE: PLAN AND PROFILE
MARBLE STONE DRIVE
STA. 36+00 TO STA. 48+00

CROSS REFERENCE FILE NO.: D-0442-48
PROJECT NUMBER: N0442-509-000

LISA M. GIORDANO
LICENSE # 59318

INDEX NUMBER: D-0442-150

SHEET NUMBER: 24 OF 38

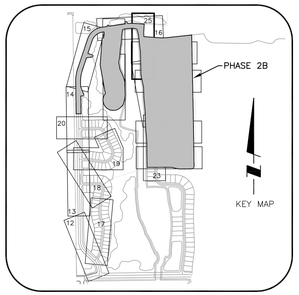

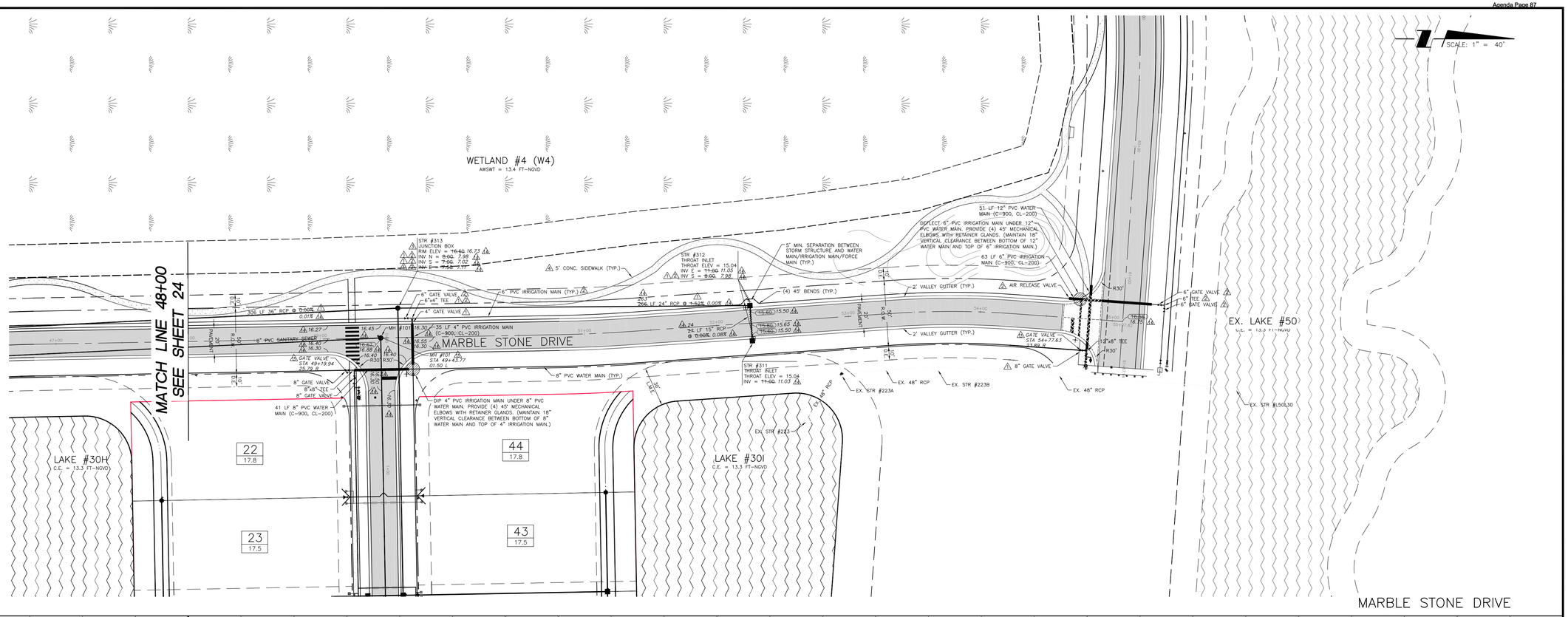

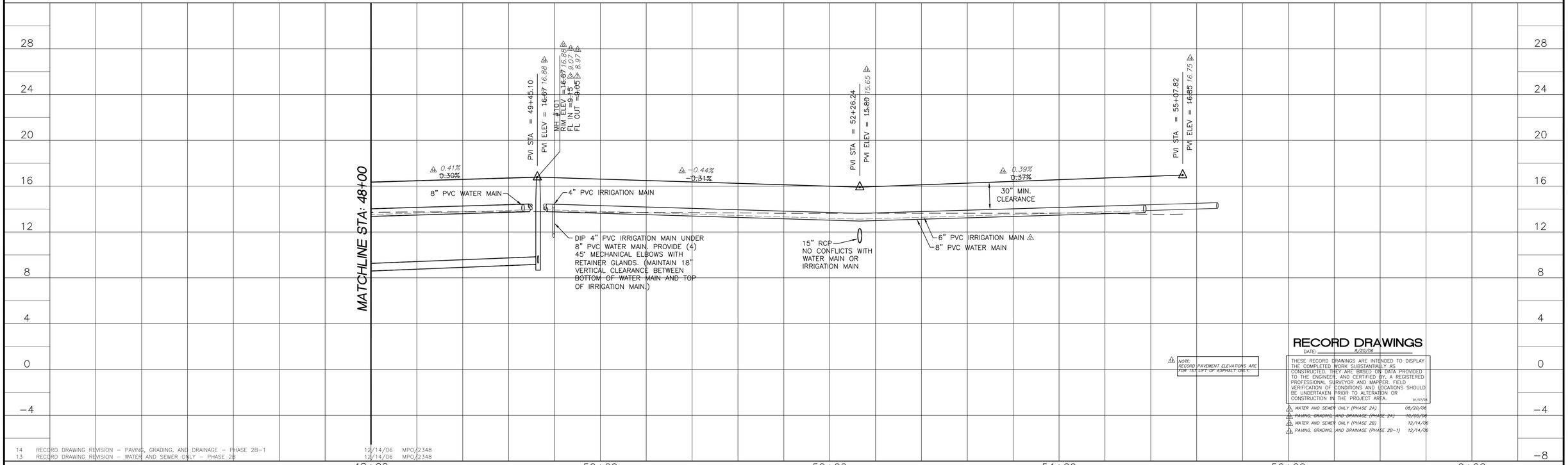

NOTE:
RECORD PAVEMENT ELEVATIONS ARE FOR 1ST LIFT OF ASPHALT ONLY.

RECORD DRAWINGS

DATE: 8/20/06

THESE RECORD DRAWINGS ARE INTENDED TO DISPLAY THE COMPLETED WORK SUBSTANTIALLY AS CONSTRUCTED. THEY ARE BASED ON DATA PROVIDED TO THE ENGINEER, AND CERTIFIED BY, A REGISTERED PROFESSIONAL SURVEYOR AND MAPPER. FIELD VERIFICATION OF CONDITIONS AND LOCATIONS SHOULD BE UNDERTAKEN PRIOR TO ALTERATION OR CONSTRUCTION IN THE PROJECT AREA. 01/07/08

1	WATER AND SEWER ONLY (PHASE 2A)	08/20/06
2	PAVING, GRADING, AND DRAINAGE (PHASE 2A)	10/03/06
3	WATER AND SEWER ONLY (PHASE 2B)	12/14/06
4	PAVING, GRADING, AND DRAINAGE (PHASE 2B-1)	12/14/06

REV NO.	REVISION	DATE	DRAWN BY / EMP. NO.	CHECKED BY / EMP. NO.
14	RECORD DRAWING REVISION – PAVING, GRADING, AND DRAINAGE – PHASE 2B-1	12/14/06	MPO/2348	
13	RECORD DRAWING REVISION – WATER AND SEWER ONLY – PHASE 2B	12/14/06	MPO/2348	
10	REVISED FOR UTILITIES CONVEYANCE	12/14/06	MPO/2348	
4	REVISED FOR INSUBSTANTIAL CHANGE	5/4/06	RRM/1482	
3	REVISED PER FDEP COMMENTS AND PER ENGINEER	3/22/06	RRM/1482	
2	REVISED PER ENGINEER & COUNTY COMMENTS	11/29/05	RRM/1482	
1	REVISED PER COLLIER COUNTY COMMENTS	9/29/05	RRM/1482	

REVISION Feb 07, 2008 – 16:25:22 T:\DASILVA\X:\ENG\N0442\150-QuarryPhase2\Rev14-rcrdPaving&Drainage\04215025.dwg

ACTIVITY	INITIALS/EMP. NO.	DATE
DESIGNED BY:	LMG/894	4/15/05
DRAWN BY:	RRM/1482	4/15/05
CHECKED BY:		
CONTRACT ADMIN. BY:		
WM APPROVED BY:		

WilsonMiller
Planners · Engineers · Ecologists · Surveyors · Landscape Architects · Transportation Consultants
WilsonMiller, Inc.
Naples · Fort Myers · Sarasota · Bradenton · Tampa · Tallahassee
4571 Colonial Boulevard, Suite 100 · Fort Myers, Florida 33912 · Phone 239-939-1020 · Fax 239-939-3412 · Web-Site www.wilsonmiller.com
WilsonMiller, Inc. – FL Lic # LC-0000170
WilsonMiller, Inc. – Certificate of Authorization #43

CLIENT: CENTEX HOMES

PROJECT: THE QUARRY PHASE 2

DATE: FEB 2005
HORIZONTAL SCALE: 1" = 40'
VERTICAL SCALE: 1" = 4'
SEC: 14, 23 TWP: 48S RGE: 26E
CROSS REFERENCE FILE NO.: D-0442-48

TITLE: PLAN AND PROFILE
MARBLE STONE DRIVE
48+00 TO END

PROJECT NUMBER: N0442-509-000

LISA M. GIORDANO
LICENSE # 59318

INDEX NUMBER: D-0442-150

SHEET NUMBER: 25 OF 38

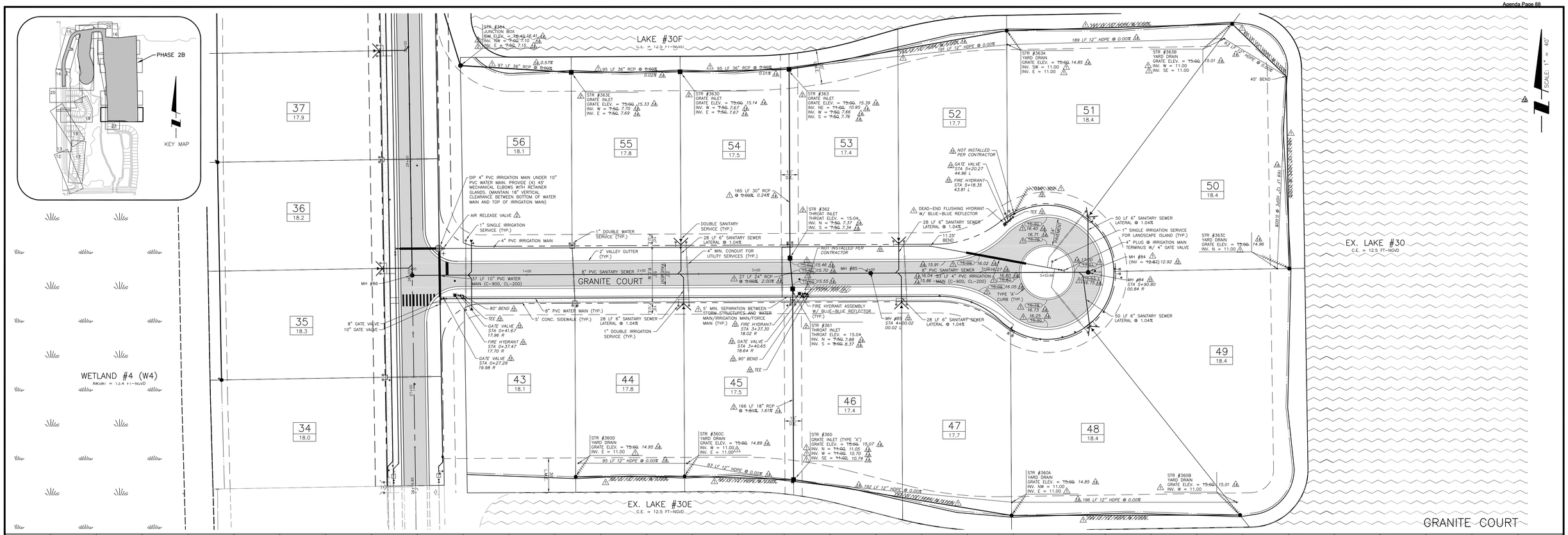

REV NO.	REVISION	DATE	DRAWN BY / EMP. NO.	CHECKED BY / EMP. NO.
14	RECORD DRAWING REVISION – PAVING, GRADING, AND DRAINAGE – PHASE 2B-1	12/14/06	MPO/2348	
13	RECORD DRAWING REVISION – WATER AND SEWER ONLY – PHASE 2B	12/14/06	MPO/2348	
10	REVISED FOR UTILITIES CONVEYANCE	12/14/06	MPO/2348	
4	REVISED FOR INSUBSTANTIAL CHANGE	5/4/06	RRM/1482	
2	REVISED PER ENGINEER & COUNTY COMMENTS	11/29/05	RRM/1482	
1	REVISED PER COLLIER COUNTY COMMENTS	9/28/05	RRM/1482	

Feb 19, 2008 – 14:44:05 TDASILVA(K:\ENG\N0442\150-QuarryPhase2\Rev14-rcrdPaving&Drainage\044215026.dwg

ACTIVITY	INITIALS/EMP. NO.	DATE
DESIGNED BY:	LMG/894	4/15/05
DRAWN BY:	RRM/1482	4/15/05
CHECKED BY:		
CONTRACT ADMIN. BY:		
WM APPROVED BY:		

WilsonMiller
Planners - Engineers - Ecologists - Surveyors - Landscape Architects - Transportation Consultants
WilsonMiller, Inc.
Naples - Fort Myers - Sarasota - Bradenton - Tampa - Tallahassee
4571 Colonial Boulevard, Suite 100 - Fort Myers, Florida 33912 - Phone 239-939-1020 - Fax 239-939-3412 - Web-Site www.wilsonmiller.com
WilsonMiller, Inc. – FL Lic # LC-0000170
WilsonMiller, Inc. – Certificate of Authorization #43

CLIENT: CENTEX HOMES
PROJECT: THE QUARRY PHASE 2

DATE: FEB 2005
HORIZONTAL SCALE: 1" = 40'
VERTICAL SCALE: 1" = 4'
SEC: 14, 23 TWP: 48S RGE: 26E
CROSS REFERENCE FILE NO.: D-0442-48
PROJECT NUMBER: N0442-509-000

TITLE: PLAN AND PROFILE
GRANITE COURT
STA. 0+00 TO END

LISA M. GIORDANO
LICENSE # 59318
INDEX NUMBER: D-0442-150
SHEET NUMBER: 26 OF 38

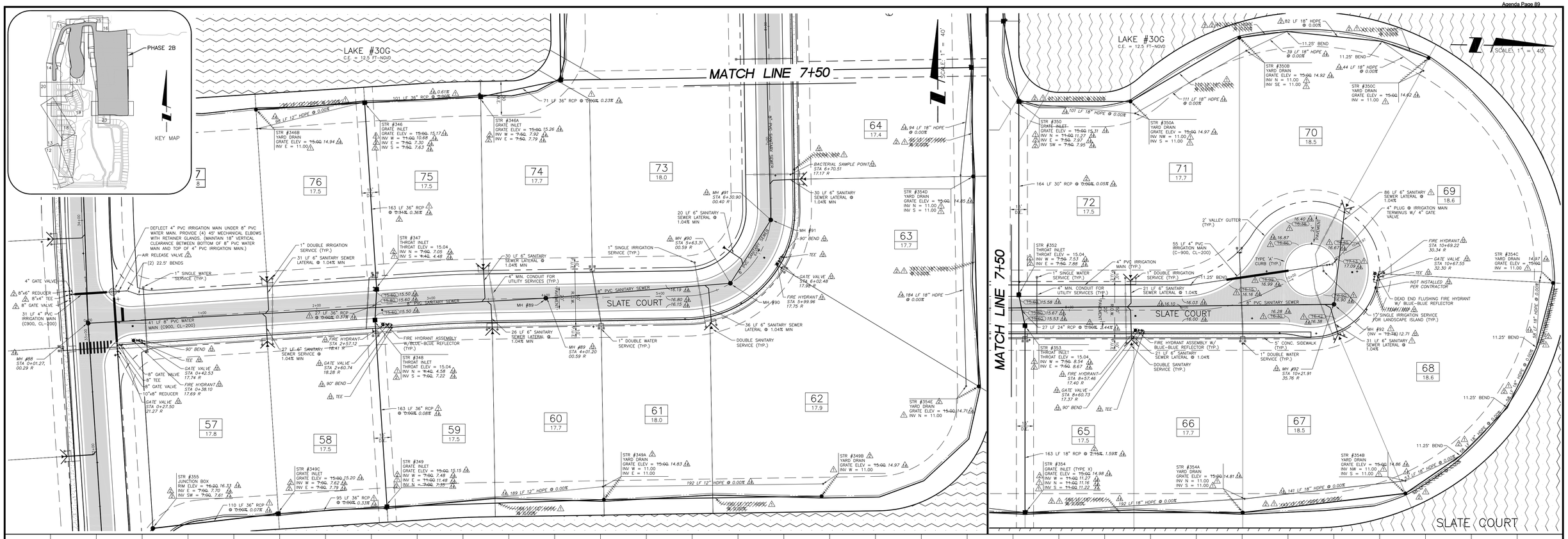

RECORD DRAWINGS
DATE: 8/20/06

THESE RECORD DRAWINGS ARE INTENDED TO DISPLAY THE COMPLETED WORK SUBSTANTIALLY AS CONSTRUCTED. THEY ARE BASED ON DATA PROVIDED TO THE ENGINEER, AND CERTIFIED BY A REGISTERED PROFESSIONAL SURVEYOR AND MAPPER. FIELD VERIFICATION OF CONDITIONS AND LOCATIONS SHOULD BE UNDERTAKEN PRIOR TO ALTERATION OR CONSTRUCTION IN THE PROJECT AREA. 01/07/03

NOTE: RECORD PAVEMENT ELEVATIONS ARE FOR 1ST LIFT OF ASPHALT ONLY.

1	WATER AND SEWER ONLY (PHASE 2A)	08/20/06
2	PAVING, GRADING, AND DRAINAGE (PHASE 2A)	10/05/06
3	WATER AND SEWER ONLY (PHASE 2B)	12/14/06
4	PAVING, GRADING, AND DRAINAGE (PHASE 2B-1)	12/14/06

14	RECORD DRAWING REVISION – PAVING, GRADING, AND DRAINAGE – PHASE 2B	12/14/06	MPO/2348
13	RECORD DRAWING REVISION – WATER AND SEWER ONLY – PHASE 2B	12/14/06	MPO/2348
10	REVISED FOR UTILITIES CONVEYANCE	12/14/06	MPO/2348
4	REVISED FOR INSUBSTANTIAL CHANGE	5/4/06	RRM/1482
3	REVISED PER FDEP COMMENTS AND PER ENGINEER	3/22/06	RRM/1482
2	REVISED PER ENGINEER & COUNTY COMMENTS	11/29/05	RRM/1482
1	REVISED PER COLLIER COUNTY COMMENTS	9/28/05	RRM/1482
△REV NO.	REVISION	DATE	DRAWN BY / EMP. NO. / CHECKED BY / EMP. NO.

Mar 12, 2008 – 09:50:21 TDASILVA(X:\ENG\N0442\150-QuarryPhase2\Rev14-rcrdPaving&Drainage\04421502 7.dwg

ACTIVITY	INITIALS/EMP. NO.	DATE
DESIGNED BY:	LMG/894	4/15/05
DRAWN BY:	RRM/1482	4/15/05
CHECKED BY:		
CONTRACT ADMIN. BY:		
WM APPROVED BY:		

WilsonMiller
Planners - Engineers - Ecologists - Surveyors - Landscape Architects - Transportation Consultants
WilsonMiller, Inc.
Naples - Fort Myers - Sarasota - Bradenton - Tampa - Tallahassee
4571 Colonial Boulevard, Suite 100 - Fort Myers, Florida 33912 - Phone 239-939-1020 - Fax 239-939-3412 - Web-Site www.wilsonmiller.com
WilsonMiller, Inc. – FL Lic.# LC-0000170
WilsonMiller, Inc. – Certificate of Authorization #43

CLIENT: CENTEX HOMES
PROJECT: THE QUARRY PHASE 2

DATE: FEB 2005
HORIZONTAL SCALE: 1" = 40'
VERTICAL SCALE: 1" = 4'
SEC: 14, 23 TWP: 48S RGE: 26E
CROSS REFERENCE FILE NO.: D-0442-48

TITLE: PLAN AND PROFILE
SLATE COURT
STA. 0+00 TO END

PROJECT NUMBER: N0442-509-000

LISA M. GIORDANO
LICENSE # 59318
INDEX NUMBER: D-0442-150
SHEET NUMBER: 27 OF 38

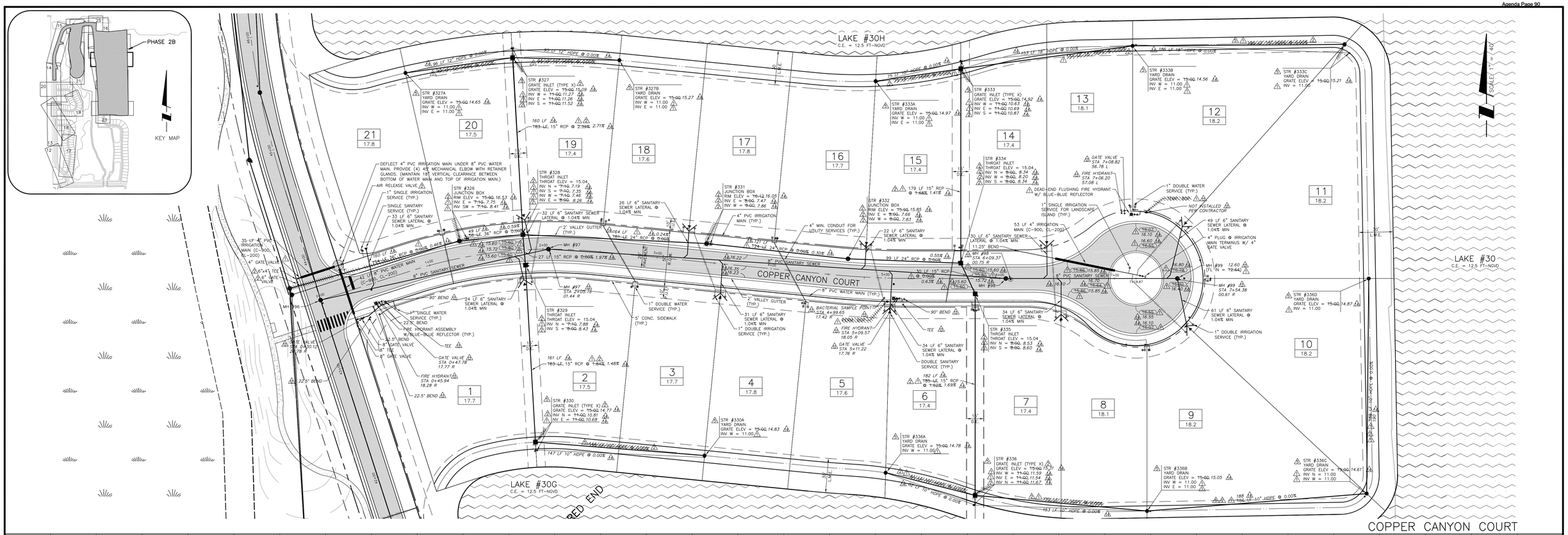

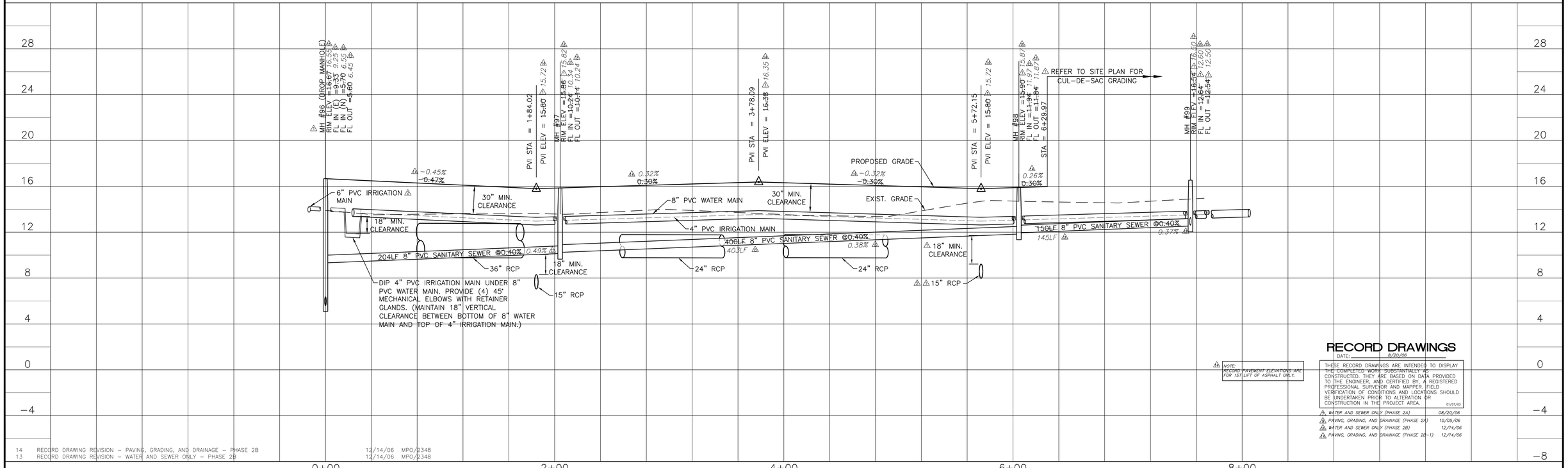

NOTE: RECORD PAVEMENT ELEVATIONS ARE FOR 1ST LIFT OF ASPHALT ONLY.

RECORD DRAWINGS

DATE: 8/20/06

THESE RECORD DRAWINGS ARE INTENDED TO DISPLAY THE COMPLETED WORK SUBSTANTIALLY AS CONSTRUCTED. THEY ARE BASED ON DATA PROVIDED TO THE ENGINEER, AND CERTIFIED BY, A REGISTERED PROFESSIONAL SURVEYOR AND MAPPER. FIELD VERIFICATION OF CONDITIONS AND LOCATIONS SHOULD BE UNDERTAKEN PRIOR TO ALTERATION OR CONSTRUCTION IN THE PROJECT AREA. 01/07/03

WATER AND SEWER ONLY (PHASE 2A) 08/20/06
PAVING, GRADING, AND DRAINAGE (PHASE 2A) 10/05/06
WATER AND SEWER ONLY (PHASE 2B) 12/14/06
PAVING, GRADING, AND DRAINAGE (PHASE 2B-1) 12/14/06

REV NO.	REVISION	DATE	DRAWN BY / EMP. NO.	CHECKED BY / EMP. NO.
14	RECORD DRAWING REVISION – PAVING, GRADING, AND DRAINAGE – PHASE 2B	12/14/06	MPO/2348	
13	RECORD DRAWING REVISION – WATER AND SEWER ONLY – PHASE 2B	12/14/06	MPO/2348	
10	REVISED FOR UTILITIES CONVEYANCE	12/14/06	MPO/2348	
5	REVISED PER ENGINEER & OWNER	6/3/06	RRM/1482	
4	REVISED FOR INSUBSTANTIAL CHANGE	5/4/06	RRM/1482	
2	REVISED PER ENGINEER & COUNTY COMMENTS	11/29/05	RRM/1482	
1	REVISED PER COLLIER COUNTY COMMENTS	9/29/05	RRM/1482	

Feb 07, 2008 – 15:40:04 TDASILVA(K:\ENG\N0442\150-QuarryPhase2\Rev14-rcrdPaving&Drainage\044215028.dwg

ACTIVITY	INITIALS/EMP. NO.	DATE
DESIGNED BY:	LMG/894	4/15/05
DRAWN BY:	RRM/1482	4/15/05
CHECKED BY:		
CONTRACT ADMIN. BY:		
WM APPROVED BY:		

WilsonMiller
Planners - Engineers - Ecologists - Surveyors - Landscape Architects - Transportation Consultants
WilsonMiller, Inc.
Naples - Fort Myers - Sarasota - Bradenton - Tampa - Tallahassee
4571 Colonial Boulevard, Suite 100 - Fort Myers, Florida 33912 - Phone 239-939-1020 - Fax 239-939-3412 - Web-Site www.wilsonmiller.com
WilsonMiller, Inc. – FL Lic # LC-0000170
WilsonMiller, Inc. – Certificate of Authorization #43

CLIENT: CENTEX HOMES
PROJECT: THE QUARRY PHASE 2

DATE: FEB 2005
HORIZONTAL SCALE: 1" = 40'
VERTICAL SCALE: 1" = 4'
SEC: 14, 23 TWP: 48S RGE: 26E
CROSS REFERENCE FILE NO.: D-0442-48

TITLE: PLAN AND PROFILE
COPPER CANYON COURT
STA. 0+00 TO END

PROJECT NUMBER: N0442-509-000

LISA M. GIORDANO LICENSE # 59318
INDEX NUMBER: D-0442-150
SHEET NUMBER: 28 OF 38

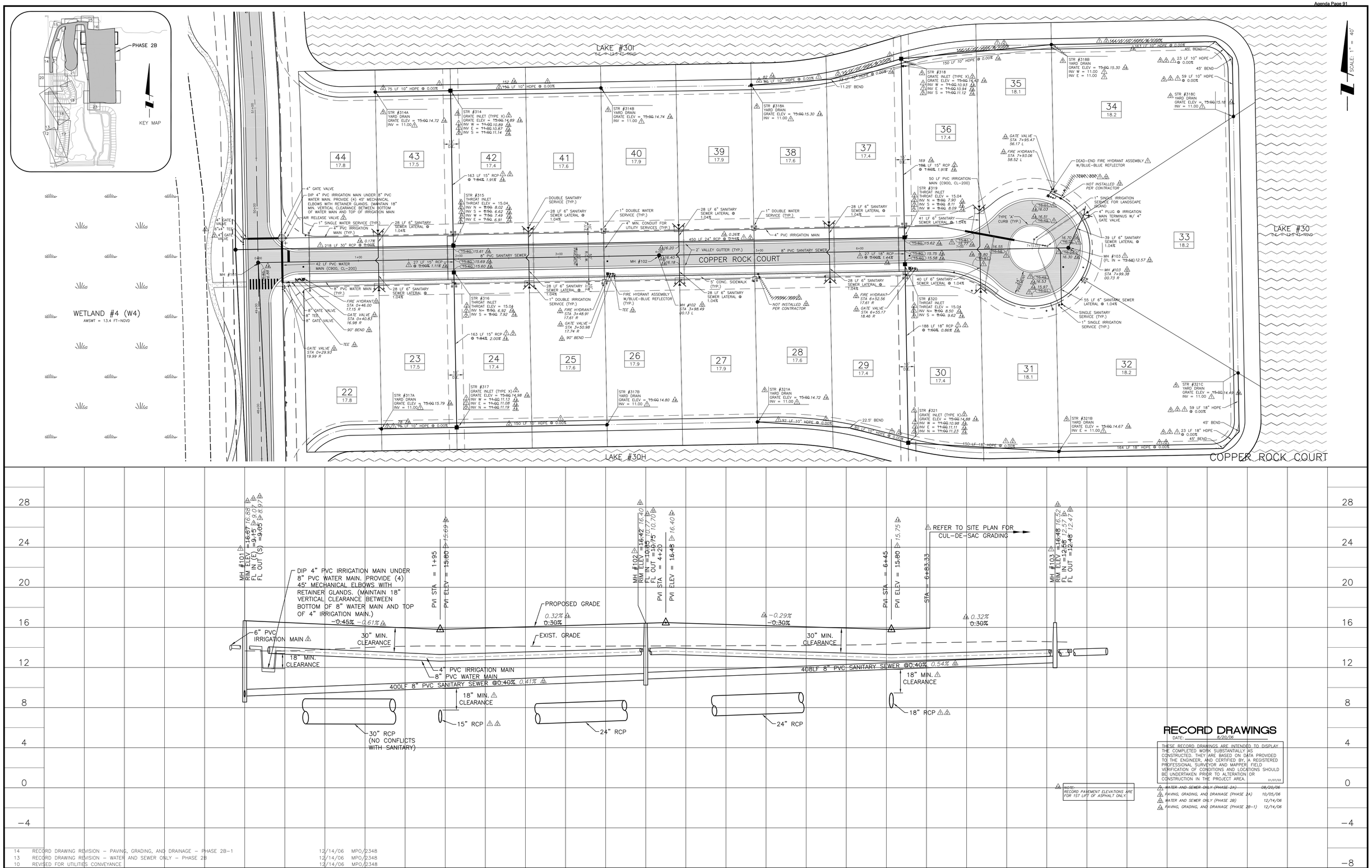

RECORD DRAWINGS
DATE: 5/29/06

THESE RECORD DRAWINGS ARE INTENDED TO DISPLAY THE COMPLETED WORK SUBSTANTIALLY AS CONSTRUCTED. THEY ARE BASED ON DATA PROVIDED TO THE ENGINEER, AND CERTIFIED BY, A REGISTERED PROFESSIONAL SURVEYOR AND MAPPER. FIELD VERIFICATION OF CONDITIONS AND LOCATIONS SHOULD BE UNDERTAKEN PRIOR TO ALTERATION OR CONSTRUCTION IN THE PROJECT AREA. 01/07/03

NOTE: RECORD PAVEMENT ELEVATIONS ARE FOR 1ST LIFT OF ASPHALT ONLY.

WATER AND SEWER ONLY (PHASE 2A)	08/20/06
PAVING, GRADING, AND DRAINAGE (PHASE 2A)	10/05/06
WATER AND SEWER ONLY (PHASE 2B)	12/14/06
PAVING, GRADING, AND DRAINAGE (PHASE 2B-1)	12/14/06

REV. NO.	REVISION	DATE	DRAWN BY / EMP. NO.	CHECKED BY / EMP. NO.
14	RECORD DRAWING REVISION – PAVING, GRADING, AND DRAINAGE – PHASE 2B-1	12/14/06	MPO/2348	
13	RECORD DRAWING REVISION – WATER AND SEWER ONLY – PHASE 2B	12/14/06	MPO/2348	
10	REVISED FOR UTILITIES CONVEYANCE	12/14/06	MPO/2348	
5	REVISED PER ENGINEER & OWNER	6/3/06	RRM/1482	
4	REVISED FOR INSUBSTANTIAL CHANGE	5/4/06	RRM/1482	
3	REVISED PER FDEP COMMENTS AND PER ENGINEER	3/22/06	RRM/1482	
2	REVISED PER ENGINEER & COUNTY COMMENTS	11/29/05	RRM/1482	
1	REVISED PER COLLIER COUNTY COMMENTS	9/29/05	RRM/1482	

Feb 20, 2008 – 10:51:37 TDASILVA(X:\ENG\N0442\150-QuarryPhase2\Rev14-rcrdPaving&Drainage\044215029.dwg

ACTIVITY	INITIALS/EMP. NO.	DATE
DESIGNED BY:	LMG/894	4/15/05
DRAWN BY:	RRM/1482	4/15/05
CHECKED BY:		
CONTRACT ADMIN. BY:		
WM APPROVED BY:		

WilsonMiller, Inc. – FL Lic # LC-0000170
WilsonMiller, Inc. – Certificate of Authorization #43

WilsonMiller
Planners - Engineers - Ecologists - Surveyors - Landscape Architects - Transportation Consultants
WilsonMiller, Inc.
Naples - Fort Myers - Sarasota - Bradenton - Tampa - Tallahassee
4571 Colonial Boulevard, Suite 100 - Fort Myers, Florida 33912 - Phone 239-939-1020 - Fax 239-939-3412 - Web-Site www.wilsonmiller.com

CLIENT: CENTEX HOMES
PROJECT: THE QUARY PHASE 2

DATE: FEB 2005
HORIZONTAL SCALE: 1" = 40'
VERTICAL SCALE: 1" = 4'
SEC: 14, 23 TWP: 48S RGE: 26E
CROSS REFERENCE FILE NO.: D-0442-48
PROJECT NUMBER: N0442-509-000

TITLE: PLAN AND PROFILE
COPPER ROCK COURT
STA. 0+00 TO END

LISA M. GIORDANO
LICENSE # 59318
INDEX NUMBER: D-0442-150
SHEET NUMBER: 29 OF 38

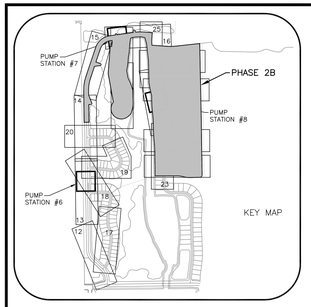

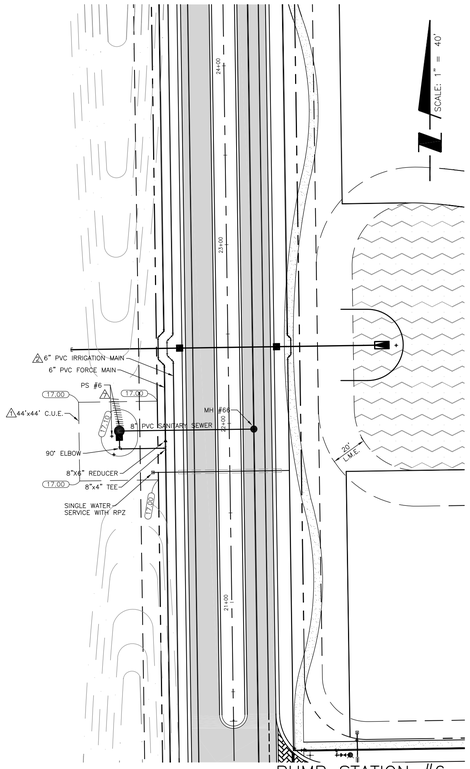

PUMP STATION #6

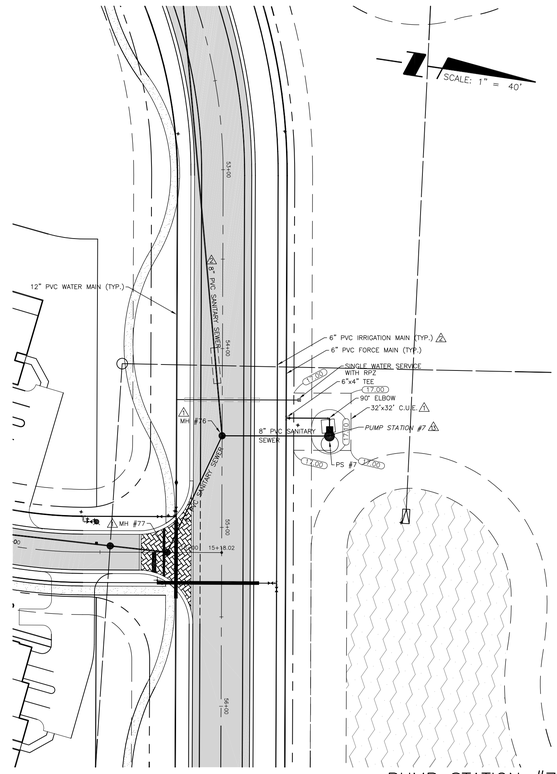

PUMP STATION #7

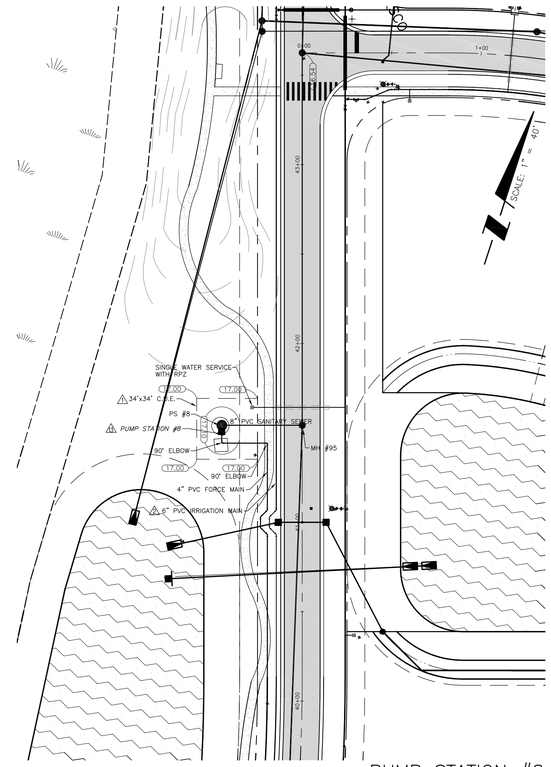

PUMP STATION #8

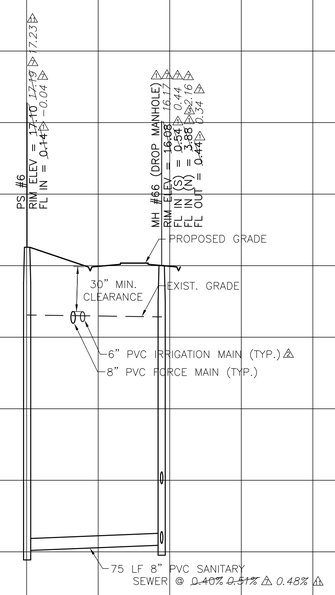

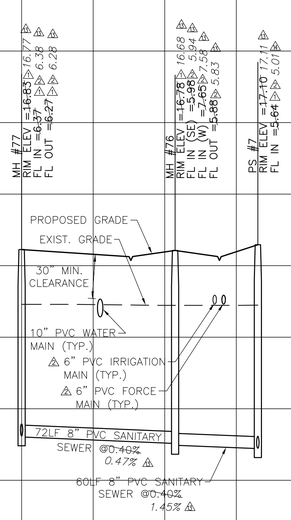

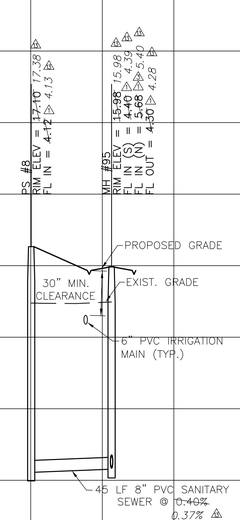

NOTE: RECORD PAVEMENT ELEVATIONS ARE FOR 1ST LIFT OF ASPHALT ONLY.

RECORD DRAWINGS

DATE: 8/20/06

THESE RECORD DRAWINGS ARE INTENDED TO DISPLAY THE COMPLETED WORK SUBSTANTIALLY AS CONSTRUCTED. THEY ARE BASED ON DATA PROVIDED TO THE ENGINEER, AND CERTIFIED BY, A REGISTERED PROFESSIONAL SURVEYOR AND MAPPER. FIELD VERIFICATION OF CONDITIONS AND LOCATIONS SHOULD BE UNDERTAKEN PRIOR TO ALTERATION OR CONSTRUCTION IN THE PROJECT AREA. 01/10/03

3	WATER AND SEWER ONLY (PHASE 2A)	08/20/06
2	PAVING, GRADING, AND DRAINAGE (PHASE 2A)	10/05/06
1	WATER AND SEWER ONLY (PHASE 2B)	12/14/06
1	PAVING, GRADING, AND DRAINAGE (PHASE 2B-1)	12/14/06

13	RECORD DRAWING REVISION – WATER AND SEWER ONLY – PHASE 2B	12/14/06	MPO/2348
11	REVISED UTILITIES CONVEYANCE PER ENGINEER COMMENTS	1/18/07	RRM/1482
7	RECORD DRAWING REVISION – WATER AND SEWER ONLY – PHASE 2A	8/14/06	MPO/2348
4	REVISED FOR INSUBSTANTIAL CHANGE	5/4/06	RRM/1482
3	REVISED PER FDEP COMMENTS AND PER ENGINEER	3/22/06	RRM/1482
2	REVISED PER ENGINEER & COUNTY COMMENTS	11/29/05	RRM/1482
1	REVISED PER COLLIER COUNTY COMMENTS	9/28/05	RRM/1482
△REV NO.	REVISION	DATE	DRAWN BY / EMP. NO.	CHECKED BY / EMP. NO.

Feb 07, 2008 – 16:04:38 TDASILVA(K:\ENG\N0442\150-QuarryPhase2\Rev14-rcrdPaving&Drainage\044215030.dwg

ACTIVITY	INITIALS/EMP. NO.	DATE
DESIGNED BY:	LMG/894	4/15/05
DRAWN BY:	RRM/1482	4/15/05
CHECKED BY:		
CONTRACT ADMIN. BY:		
WM APPROVED BY:		

WilsonMiller
Planners - Engineers - Ecologists - Surveyors - Landscape Architects - Transportation Consultants
WilsonMiller, Inc.
Naples - Fort Myers - Sarasota - Bradenton - Tampa - Tallahassee
4571 Colonial Boulevard, Suite 100 - Fort Myers, Florida 33912 - Phone 239-939-1020 - Fax 239-939-3412 - Web-Site www.wilsonmiller.com
WilsonMiller, Inc. – FL Lic # LC-0000176
WilsonMiller, Inc. – Certificate of Authorization #43

CLIENT: CENTEX HOMES

PROJECT: THE QUARRY PHASE2

DATE: FEB 2005
HORIZONTAL SCALE: 1" = 40'
VERTICAL SCALE: 1" = 4'
SEC: 14, 23 TWP: 48S RGE: 26E
CROSS REFERENCE FILE NO.: D-0442-48

TITLE: PLAN AND PROFILE
PUMP STATIONS #6, 7, 8

PROJECT NUMBER: N0442-509-000

LISA M. GIORDANO
LICENSE # 59318

INDEX NUMBER: D-0442-150

SHEET NUMBER: 30 OF 38

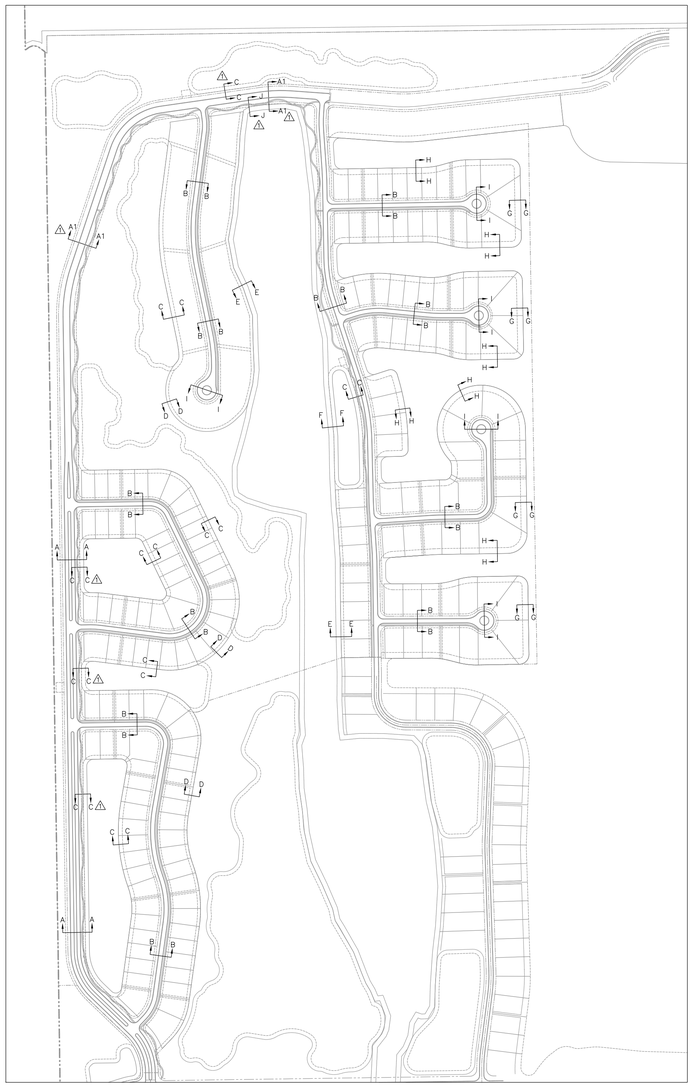

CROSS SECTION MAP

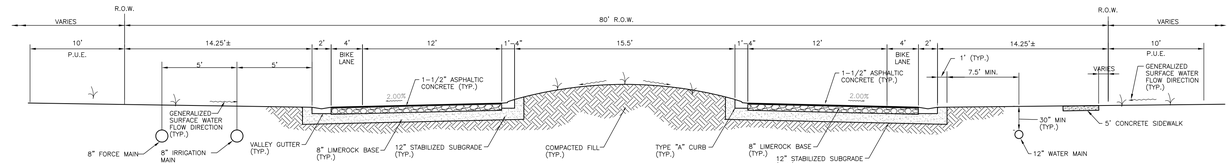

SECTION A–A
N.T.S.

ROADWAY RESTORATION NOTES:
1.) ONE FOOT OF STRIP SOD SHALL BE PLACED ALONGSIDE BACK–OF–CURB FOR ALL TYPICAL ROADWAY SECTIONS.
2.) ALL UNPAVED AREAS WITHIN RIGHT–OF–WAY SHALL BE SEEDED AND MULCHED (MINIMUM).

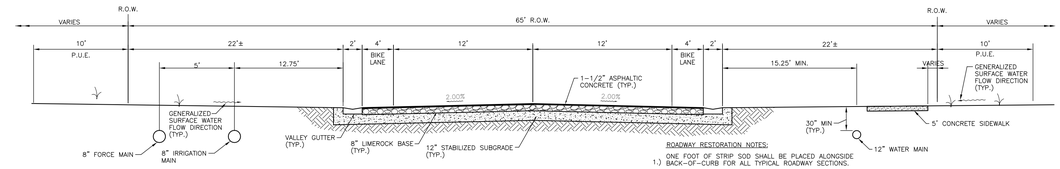

SECTION A1–A1
N.T.S.

ROADWAY RESTORATION NOTES:
1.) ONE FOOT OF STRIP SOD SHALL BE PLACED ALONGSIDE BACK–OF–CURB FOR ALL TYPICAL ROADWAY SECTIONS.
2.) ALL UNPAVED AREAS WITHIN RIGHT–OF–WAY SHALL BE SEEDED AND MULCHED (MINIMUM).

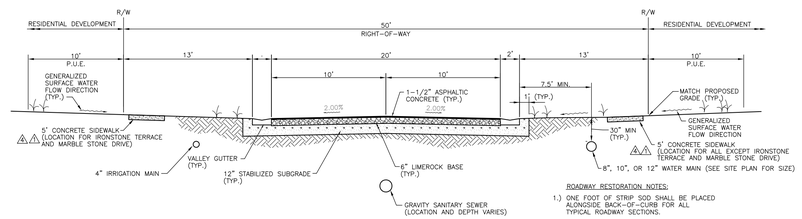

SECTION B–B
N.T.S.

ROADWAY RESTORATION NOTES:
1.) ONE FOOT OF STRIP SOD SHALL BE PLACED ALONGSIDE BACK–OF–CURB FOR ALL TYPICAL ROADWAY SECTIONS.
2.) ALL UNPAVED AREAS WITHIN RIGHT–OF– WAY SHALL BE SEEDED AND MULCHED (MINIMUM).

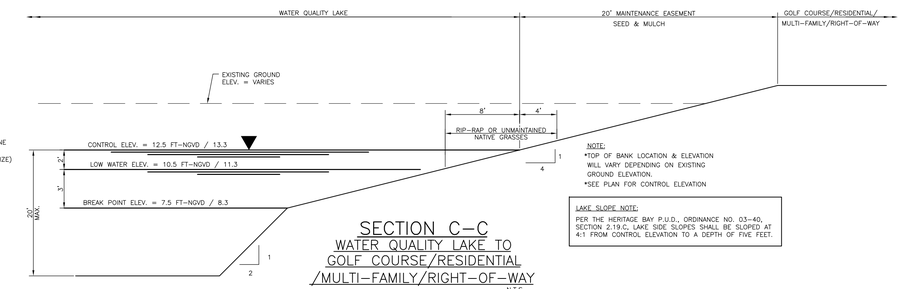

NOTE:
•TOP OF BANK LOCATION & ELEVATION WILL VARY DEPENDING ON EXISTING GROUND ELEVATION.
•SEE PLAN FOR CONTROL ELEVATION

LAKE SLOPE NOTE:
PER THE HERITAGE BAY P.U.D., ORDINANCE NO. 03–40, SECTION 2.19.C, LAKE SIDE SLOPES SHALL BE SLOPED AT 4:1 FROM CONTROL ELEVATION TO A DEPTH OF FIVE FEET.

SECTION C–C
WATER QUALITY LAKE TO GOLF COURSE/RESIDENTIAL /MULTI–FAMILY/RIGHT–OF–WAY
N.T.S.

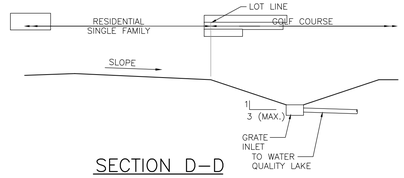

SECTION D–D
GOLF COURSE TO RESIDENTIAL SINGLE FAMILY/MULTI–FAMILY/ROW
N.T.S.

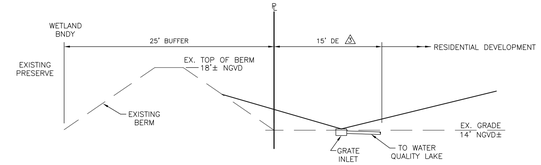

SECTION E–E
RESIDENTIAL TO EXISTING PRESERVE
N.T.S.

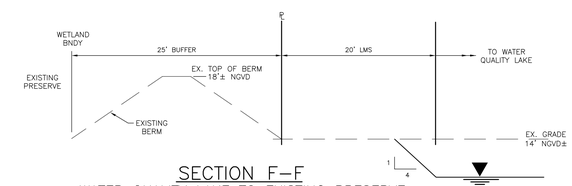

SECTION F–F
WATER QUALITY LAKE TO EXISTING PRESERVE
N.T.S.

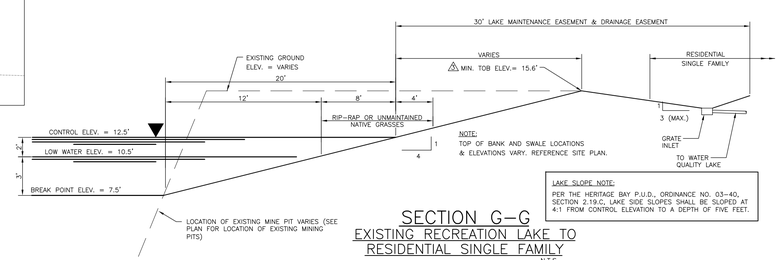

NOTE:
TOP OF BANK AND SWALE LOCATIONS & ELEVATIONS VARY. REFERENCE SITE PLAN.

LAKE SLOPE NOTE:
PER THE HERITAGE BAY P.U.D., ORDINANCE NO. 03–40, SECTION 2.19.C, LAKE SIDE SLOPES SHALL BE SLOPED AT 4:1 FROM CONTROL ELEVATION TO A DEPTH OF FIVE FEET.

SECTION G–G
EXISTING RECREATION LAKE TO RESIDENTIAL SINGLE FAMILY
N.T.S.

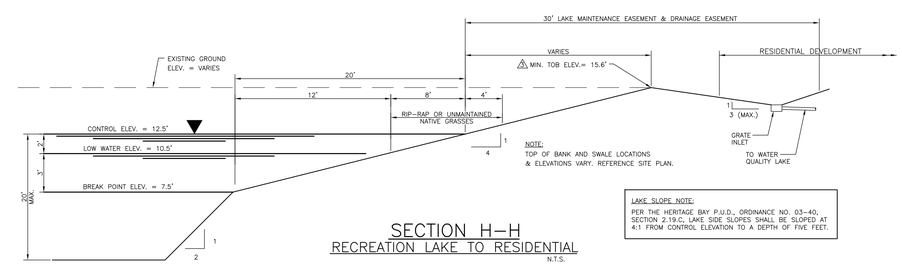

NOTE:
TOP OF BANK AND SWALE LOCATIONS & ELEVATIONS VARY. REFERENCE SITE PLAN.

LAKE SLOPE NOTE:
PER THE HERITAGE BAY P.U.D., ORDINANCE NO. 03–40, SECTION 2.19.C, LAKE SIDE SLOPES SHALL BE SLOPED AT 4:1 FROM CONTROL ELEVATION TO A DEPTH OF FIVE FEET.

SECTION H–H
RECREATION LAKE TO RESIDENTIAL
N.T.S.

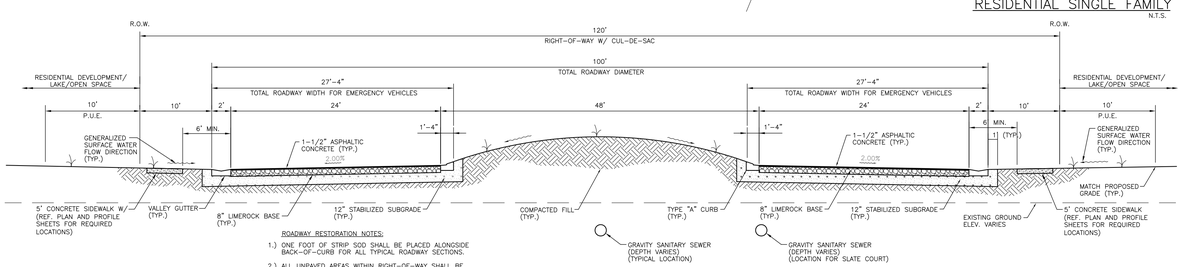

ROADWAY RESTORATION NOTES:
1.) ONE FOOT OF STRIP SOD SHALL BE PLACED ALONGSIDE BACK–OF–CURB FOR ALL TYPICAL ROADWAY SECTIONS.
2.) ALL UNPAVED AREAS WITHIN RIGHT–OF–WAY SHALL BE SEEDED AND MULCHED (MINIMUM).

SECTION I–I
TYPICAL CUL–DE–SAC DETAIL
N.T.S.

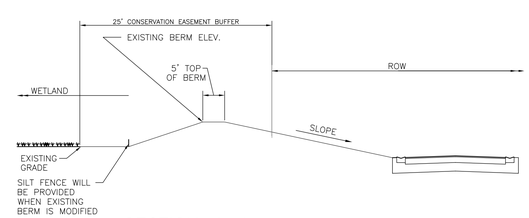

SECTION J–J
WETLAND TO RIGHT–OF–WAY
N.T.S.

RECORD DRAWINGS

DATE: 8/20/06

THESE RECORD DRAWINGS ARE INTENDED TO DISPLAY THE COMPLETED WORK SUBSTANTIALLY AS CONSTRUCTED. THEY ARE BASED ON DATA PROVIDED TO THE ENGINEER, AND CERTIFIED BY, A REGISTERED PROFESSIONAL SURVEYOR AND MAPPER. FIELD VERIFICATION OF CONDITIONS AND LOCATIONS SHOULD BE UNDERTAKEN PRIOR TO ALTERATION OR CONSTRUCTION IN THE PROJECT AREA. 01/07/03

1 WATER AND SEWER ONLY (PHASE 2A) 08/20/06
2 PAVING, GRADING, AND DRAINAGE (PHASE 2A) 10/05/06
3 WATER AND SEWER ONLY (PHASE 2B) 12/14/06
4 PAVING, GRADING, AND DRAINAGE (PHASE 2B–1) 12/14/06

REV NO.	REVISION	DATE	DRAWN BY / EMP. NO.	CHECKED BY / EMP. NO.
10	REVISED FOR UTILITIES CONVEYANCE	12/14/06	MPO/2348	
4	REVISED FOR INSUBSTANTIAL CHANGE	5/4/06	RRM/1482	
3	REVISED PER FDEP COMMENTS AND PER ENGINEER	3/22/06	RRM/1482	
1	REVISED PER COLLIER COUNTY COMMENTS	9/28/05	RRM/1482	

Feb 06, 2008 – 22:48:15 TDASILVA(K:\ENG\N0442\150-QuarryPhase2\Rev14-rcrdPaving&Drainage\044215031.dwg

ACTIVITY	INITIALS/EMP. NO.	DATE
DESIGNED BY:	LMG/894	4/15/05
DRAWN BY:	RRM/1482	4/15/05
CHECKED BY:		
CONTRACT ADMIN. BY:		
WM APPROVED BY:		

WilsonMiller
WilsonMiller, Inc. – FL Lic # LC-C000170
WilsonMiller, Inc. – Certificate of Authorization #43
Planners • Engineers • Ecologists • Surveyors • Landscape Architects • Transportation Consultants
WilsonMiller, Inc.
Naples • Fort Myers • Sarasota • Bradenton • Tampa • Tallahassee
4571 Colonial Boulevard, Suite 100 • Fort Myers, Florida 33912 • Phone 239-939-1020 • Fax 239-939-3412 • Web-Site www.wilsonmiller.com

CLIENT: CENTEX HOMES
PROJECT: THE QUARRY PHASE 2

DATE: FEB 2005
HORIZONTAL SCALE: AS NOTED
VERTICAL SCALE: AS NOTED
SEC: 14, 23 TWP: 48S RGE: 26E

TITLE: CROSS SECTIONS

LISA M. GIORDANO LICENSE # 59318

INDEX NUMBER: D–0442–150
CROSS REFERENCE FILE NO.: D–0442–48
PROJECT NUMBER: N0442–509–000
SHEET NUMBER: 31 OF 38

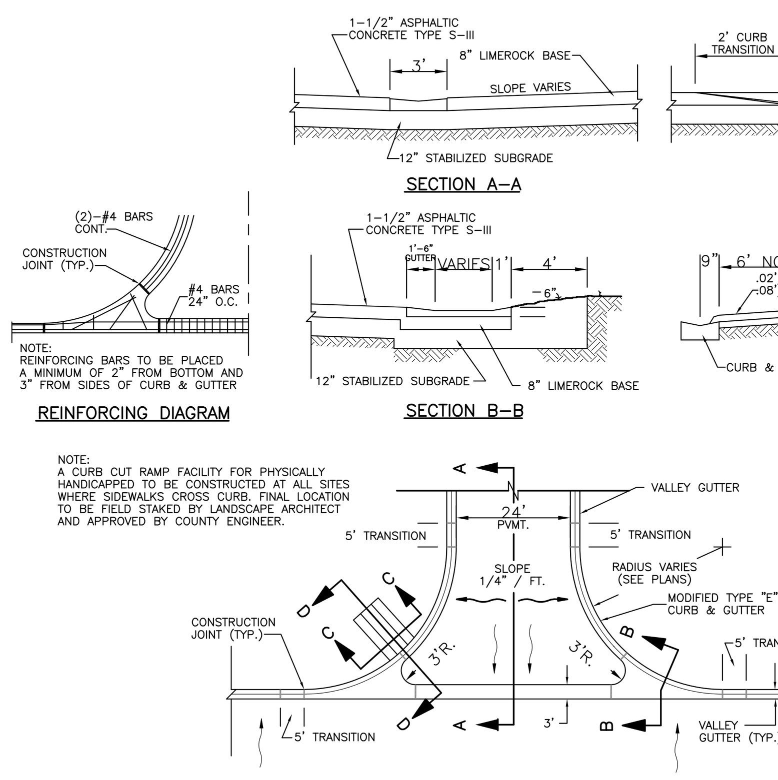

CONCRETE CURB JOINTS

1) CONCRETE SHALL HAVE A COMPRESSIVE STRENGTH OF 3000 PSI IN 28 DAYS, UNLESS OTHERWISE NOTED.
2) AN EXPANSION JOINT WILL BE PLACED AT THE END OF ALL RETURNS AT INTERVALS NOT TO EXCEED 50' WITH CONTRACTION JOINTS AT 10' INTERVALS BETWEEN.
3) PVC SLIP JOINTS SHALL BE CONSTRUCTED TO PERMIT EXPANSION & CONTRACTION OF STEEL ACROSS JOINT.
4) EXPANSION JOINTS SHALL BE CONSTRUCTED WITH 1/2" BITUMINOUS IMPREGNATED EXPANSION JOINT MATERIAL.

TYPICAL VALLEY CROSSING DETAIL (VALLEY GUTTER)
N.T.S.

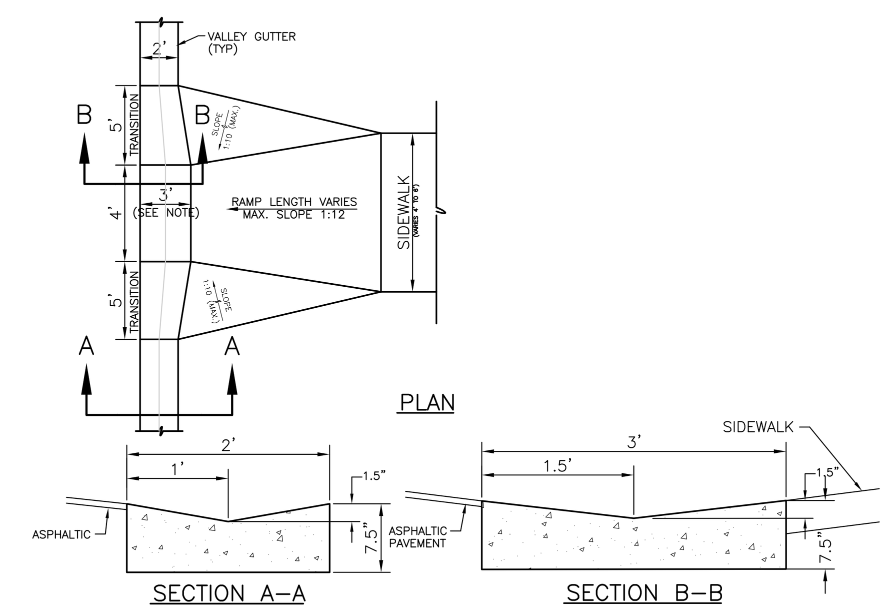

NOTES:
1.) IF VALLEY GUTTER IS 7.5" DEEP WITH 1.5" VALLEY, 3' DIMENSION AT RAMP IS SUFFICIENT TO ATTAIN 1:12 SLOPE.
2.) IF VALLEY GUTTER IS 8" DEEP WITH 2" VALLEY, THEN WIDTH OF GUTTER MUST BE 4'-0 TO ATTAIN 1:12 SLOPE.

ADA COMPLIANT CURB RAMP CONFIGURATION FOR VALLEY GUTTER
N.T.S.

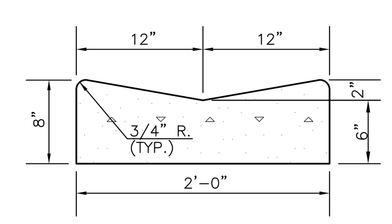

NOTES:
1) WHEN USED ON THE HIGH SIDE OF THE ROADWAYS THE CROSS SLOPE OF THE GUTTER SHALL MATCH THE CROSS SLOPE OF THE ADJACENT PAVEMENT AND THE THICKNESS OF THE LIP WILL BE LESS.
2) AN EXPANSION JOINT WILL BE PLACED AT THE END OF ALL RETURNS AT INTERVALS NOT TO EXCEED 50' WITH CONTRACTION JOINTS AT 10' INTERVALS BETWEEN.
3) EXPANSION JOINTS SHALL BE CONSTRUCTED WITH 1/2" BITUMINOUS IMPREGNATED EXPANSION JOINT MATERIAL

(FDOT. REF. INDEX #300)

VALLEY GUTTER
N.T.S.

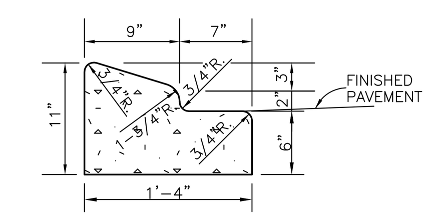

NOTES:
1) CONCRETE SHALL HAVE A COMPRESSIVE STRENGTH OF 3,000 P.S.I. IN 28 DAYS UNLESS OTHERWISE NOTED
2) AN EXPANSION JOINT WILL BE PLACED AT THE END OF ALL RETURNS AT INTERVALS NOT TO EXCEED 50' WITH CONTRACTION JOINTS AT 10' INTERVALS BETWEEN.
3) EXPANSION JOINTS SHALL BE CONSTRUCTED WITH 1/2" BITUMINOUS IMPREGNATED EXPANSION JOINT MATERIAL.

(FDOT REF. INDEX #300)

TYPE "A" CURB
N.T.S.

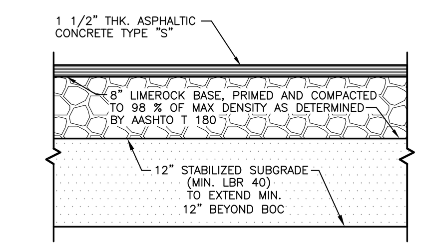

NOTE:
ASPHALT PAVEMENT SHALL BE PAVED IN TWO 3/4" LIFTS

TYPICAL ASPHALT PAVEMENT SECTION
N.T.S.

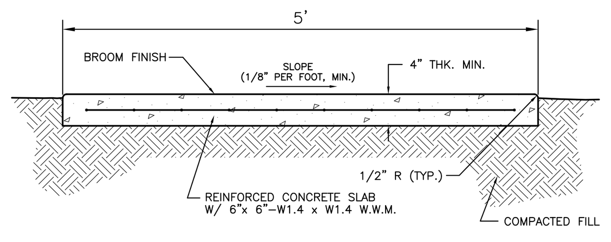

NOTES:
1.) THE PROPOSED FILL SHALL BE COMPACTED IN 12" LIFTS TO 98% OF THE MAXIMUM DENSITY IN ACCORDANCE WITH AASHTO T-180 AND THE ENGINEERS TECHNICAL SPECIFICATIONS.
2.) REINFORCING SHALL BE 6"x 6"-W1.4 x W1.4 WELDED WIRE MESH.
3.) CONCRETE SHALL HAVE A COMPRESSIVE STRENGTH OF 3,000 P.S.I. IN 28 DAYS, UNLESS OTHERWISE NOTED.
4.) SUBGRADE SHALL BE SAND, COMPACTED TO A FIRM EVEN SURFACE, TRUE TO GRADE AND CROSS-SECTION, AND BE MOIST WHEN CONCRETE IS PLACED.
5.) SIDEWALK SHALL HAVE CONTRACTION JOINTS AT 5' INTERVALS AND AN EXPANSION JOINT EVERY 100'.
6.) CONCRETE SIDEWALK CURB RAMPS SHALL BE CONSTRUCTED IN ACCORDANCE WITH FDOT 2002 DESIGN INDEX SECTION 304.
7.) CONCRETE SIDEWALK SHALL BE CONSTRUCTED IN ACCORDANCE WITH THE LATEST ADA REVISION STANDARDS.
8.) SIDEWALKS SHALL BE CONSTRUCTED OF 4" THICK PORTLAND CEMENT CONCRETE.

⚠1 TYPICAL CONCRETE SIDEWALK DETAIL
N.T.S.

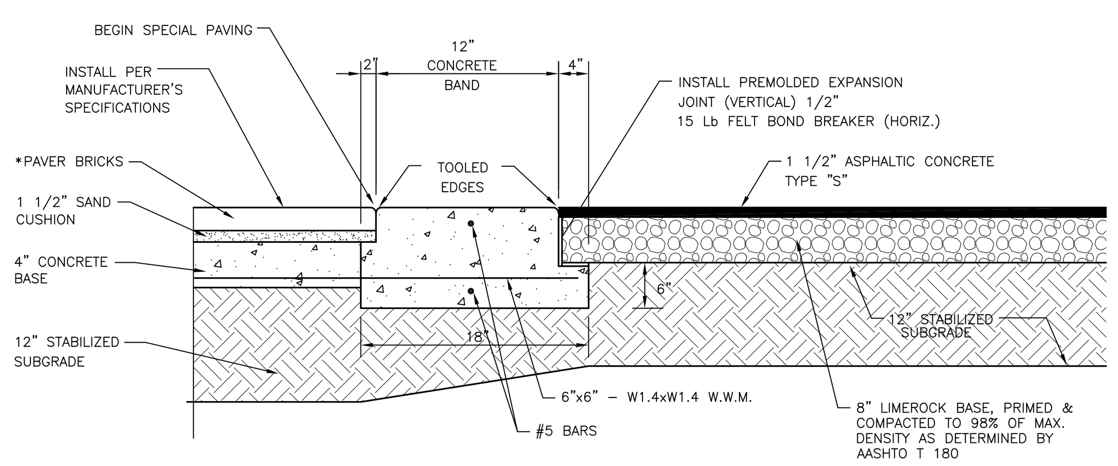

* NOTE: THICKNESS VARIES PER PAVER BRICK

NOTE:
CONCRETE TO BE 4,000 P.S.I. WITH MAXIMUM SLUMP OF 4"

CONCRETE RIBBON AND PAVER BRICK INTERFACE EDGE RESTRAINT DETAIL
N.T.S.

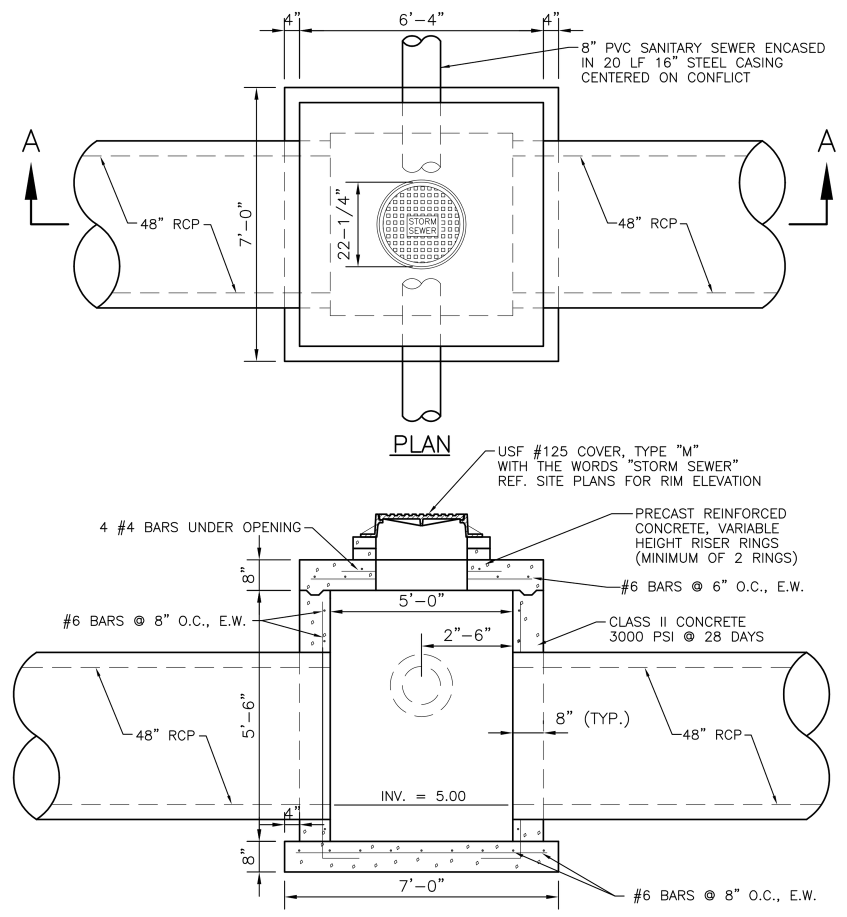

⚠6 CONFLICT BOX
N.T.S.

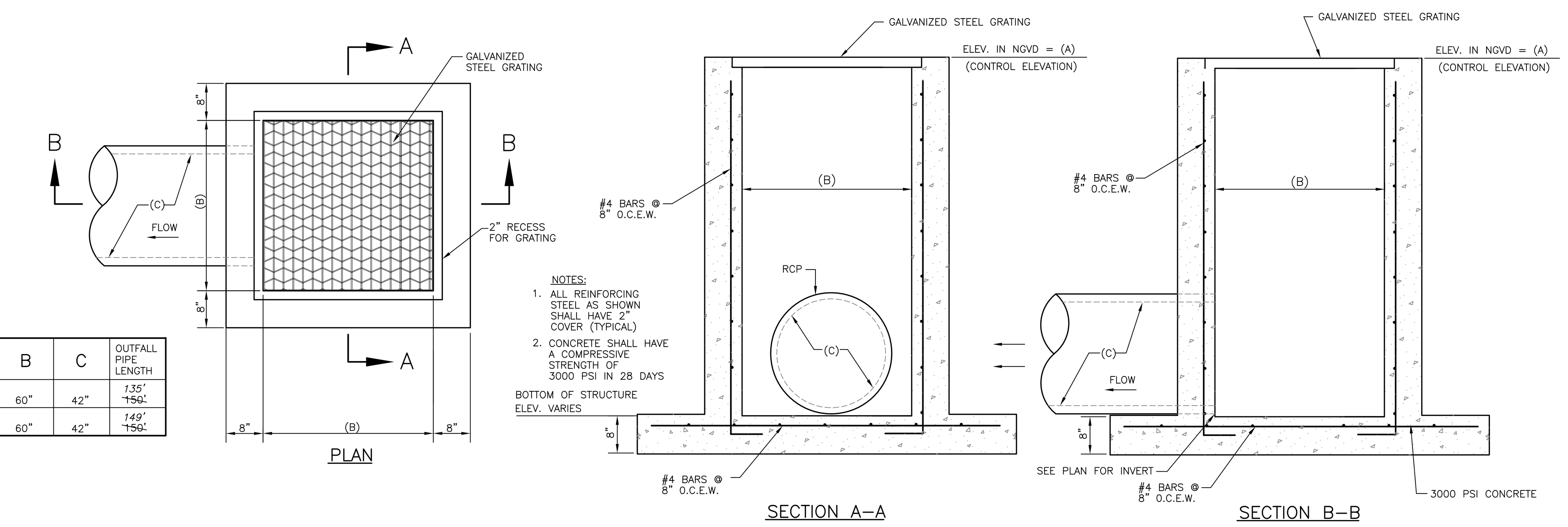

NOTES:
1. ALL REINFORCING STEEL AS SHOWN SHALL HAVE 2" COVER (TYPICAL)
2. CONCRETE SHALL HAVE A COMPRESSIVE STRENGTH OF 3000 PSI IN 28 DAYS

	WEIR	A	B	C	OUTFALL PIPE LENGTH
⚠14	L54L30-1	14.13' ~~13.3'~~	60"	42"	135' ~~150'~~
⚠14	L54L30-2	13.50' ~~13.3'~~	60"	42"	149' ~~150'~~

CONTROL STRUCTURES ⚠3
(SEE TABLE)

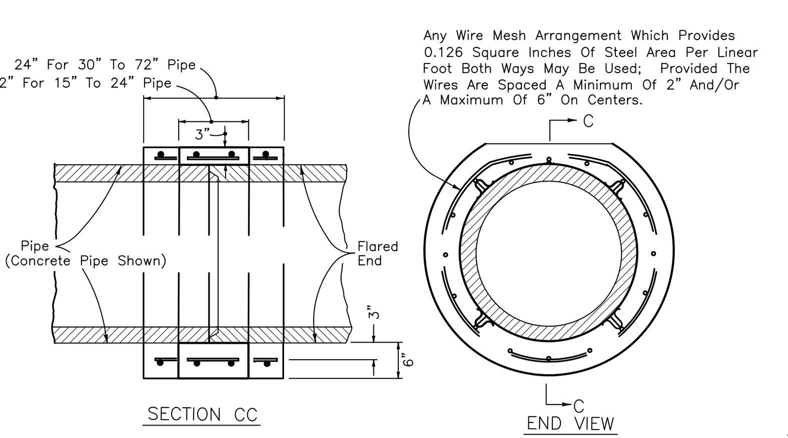

⚠1 REINFORCED CONCRETE JACKET DETAIL
N.T.S.

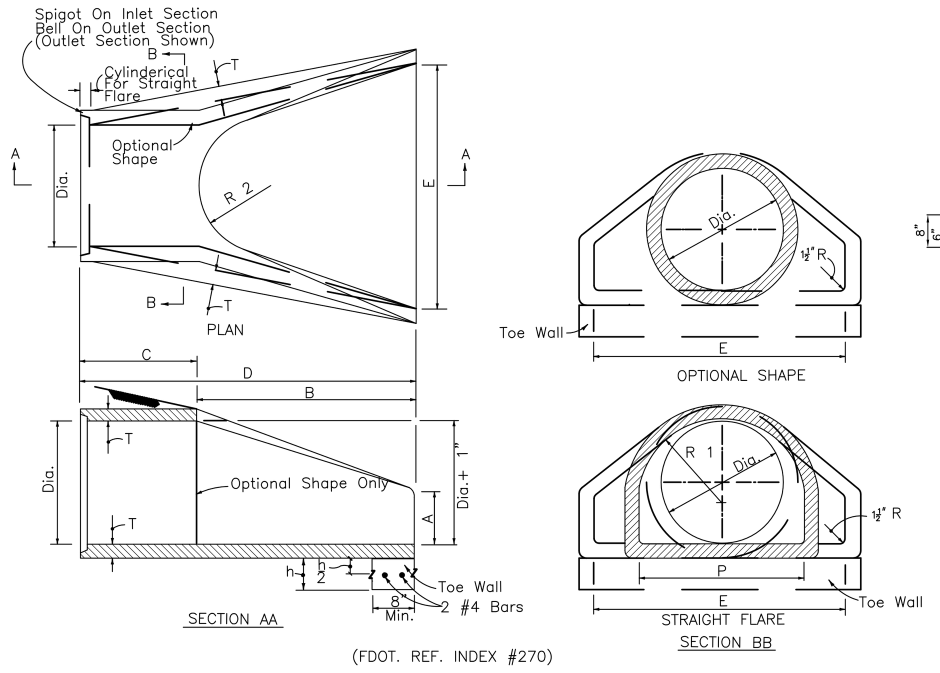

(FDOT. REF. INDEX #270)

FLARED END SECTION
N.T.S.

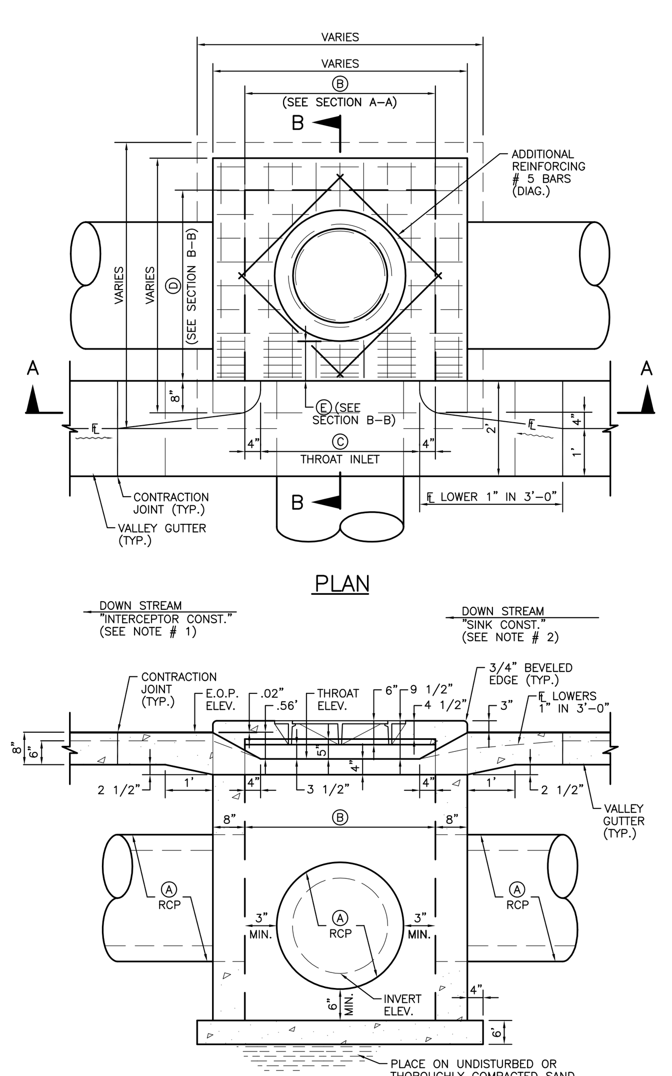

DESIGN NOTES:
1.) INTERCEPTOR CONSTRUCTION: WHEN INLET FUNCTIONS AS AN INTERCEPTOR, THE DOWNSTREAM PART OF VALLEY GUTTER SHALL BE CONSTRUCTED AS SHOWN ON THE LEFT OF PLAN VIEW AND SECTION A-A. (STRUCTURE AND VALLEY GUTTER ARE SYMMETRICAL)
2.) SINK CONSTRUCTION: WHEN INLET FUNCTIONS AS A SINK, THE VALLEY GUTTER FLOW SHALL LOWER ONE INCH (1") PER THREE FEET (3') AND TRANSITIONS AS SHOWN ON RIGHT OF PLAN VIEW AND SECTION A-A. (CONSTRUCTION & VALLEY GUTTER ARE SYMMETRICAL)
3.) WHEN INLET IS USED ON CURVED CURB SECTIONS, FRONT FACE OF BOX SHALL BE POURED RADIAL TO CURB.
4.) ALL REINFORCING STEEL AS SHOWN SHALL HAVE TWO INCH (2") MINIMUM COVER.
5.) ALL CONCRETE SHALL HAVE A COMPRESSIVE STRENGTH OF 3,000 PSI @ 28 DAYS.

DIMENSION TABLE

(A)	(B)	(C)	(D)	(E)
15"	48"	48"	48"	10" MIN.
18"	48"	48"	48"	10" MIN.
24"	48"	48"	48"	10" MIN.
30"	48"	48"	48"	10" MIN.
36"	48"	48"	48"	10" MIN.
42"	48"	48"	48"	10" MIN.
48"	54"	48"	54"	10" MIN.
54"	60"	48"	60"	12" MIN.

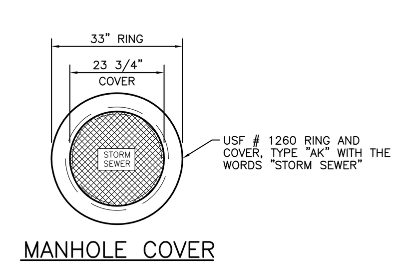

MANHOLE COVER

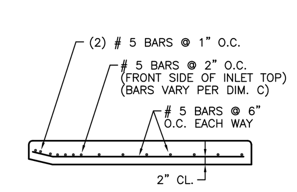

TOP SLAB SECTION

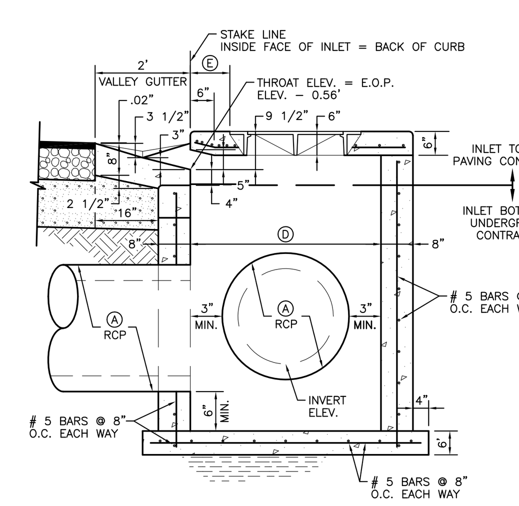

THROAT INLET DETAIL
(WITH VALLEY GUTTER)
N.T.S.

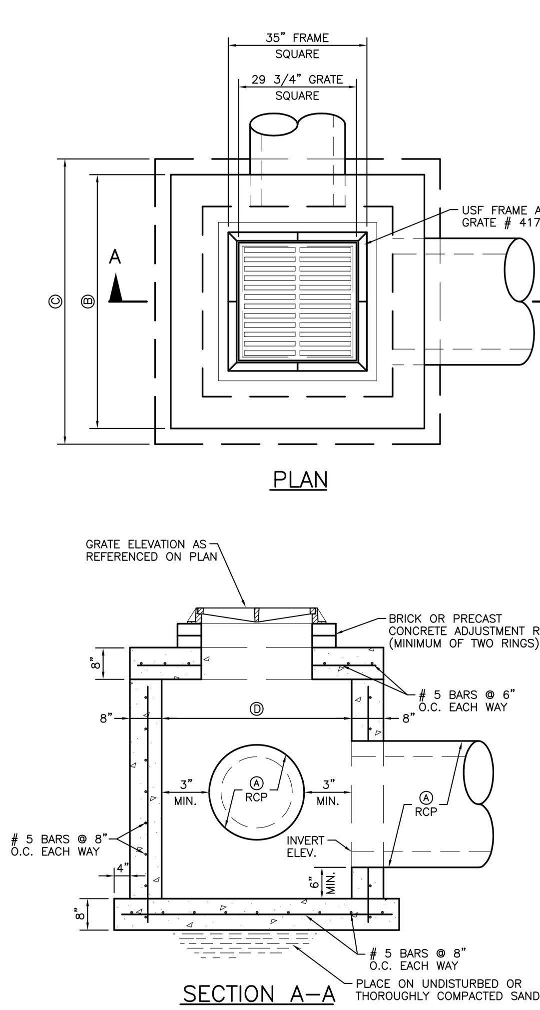

DIMENSION TABLE

(A)	(B)	(C)	(D)
15"	52"	60"	36"
18"	52"	60"	36"
24"	58"	66"	42"
30"	64"	72"	48"
36"	70"	78"	54"
42"	76"	84"	60"
48"	88"	96"	72"
54"	94"	102"	78"

DESIGN NOTES FOR STRUCTURES:
1.) ALL REINFORCING STEEL AS SHOWN SHALL HAVE TWO INCHES (2") MINIMUM COVER.
2.) ALL CONCRETE SHALL HAVE A COMPRESSIVE STRENGTH OF 3,000 PSI @ 28 DAYS.
3.) REFERENCE FDOT "ROADWAY AND TRAFFIC DESIGN STANDARDS" DATED JANUARY 2002 (INDEX 200.) FOR REINFORCING STEEL.
4.) STRUCTURES THAT ARE TO BE EQUIPPED WITH ALUMINUM BAFFLES OVER THE OUTFALL PIPE SHALL PROVIDE A MIN. OF 12" FROM THE BOTTOM OF THE STRUCTURE TO THE BOTTOM OF THE OUTFALL PIPE IN ORDER TO PROVIDE ADEQUATE CLEARANCE FROM THE BOTTOM OF THE BAFFLE TO THE BOTTOM OF THE STRUCTURE.

GRATE INLET DETAIL
N.T.S.

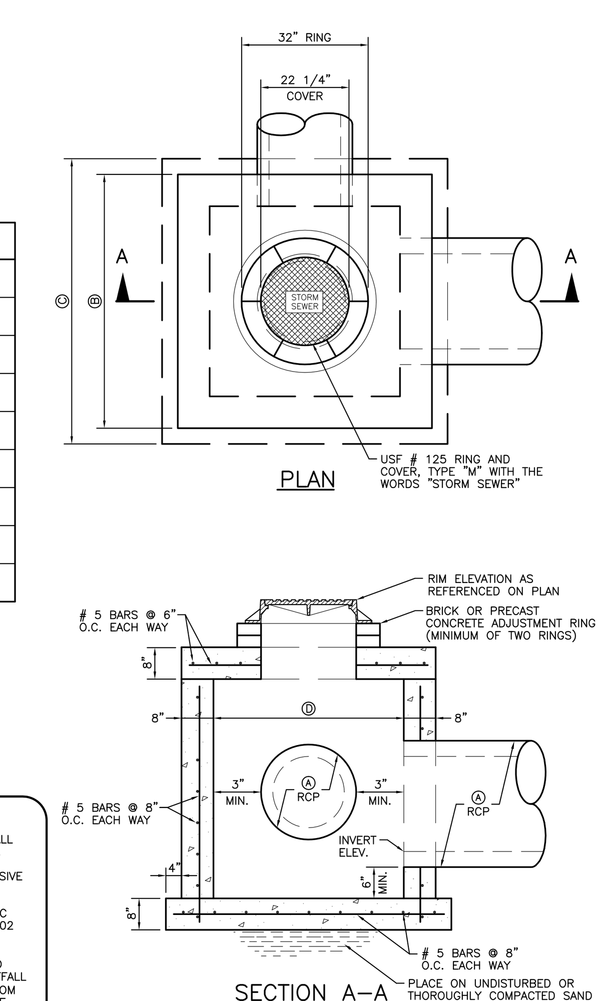

JUNCTION BOX DETAIL
N.T.S.

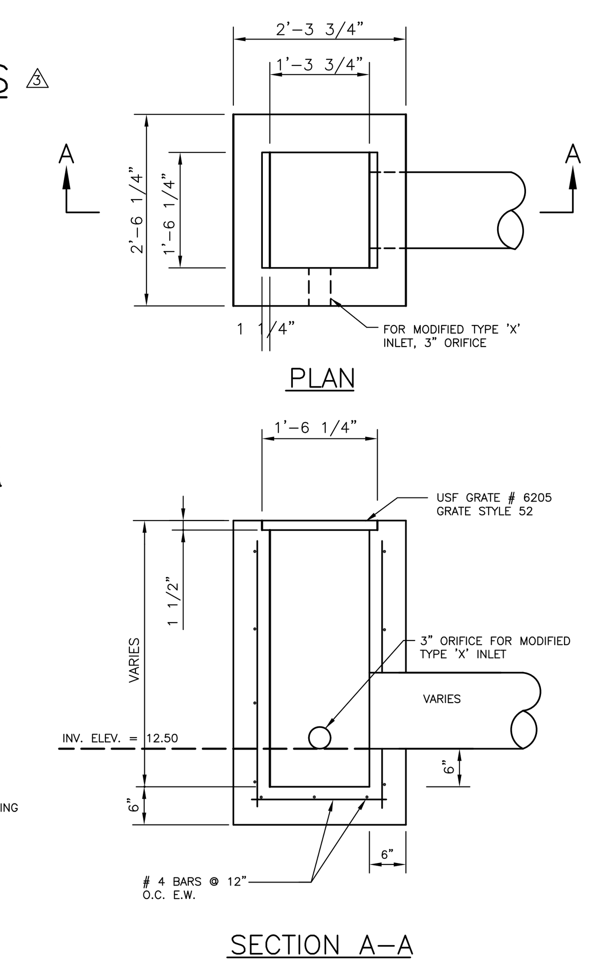

TYPE "X" INLET DETAIL
N.T.S.
(AND MODIFIED TYPE 'X' INLET DETAIL)

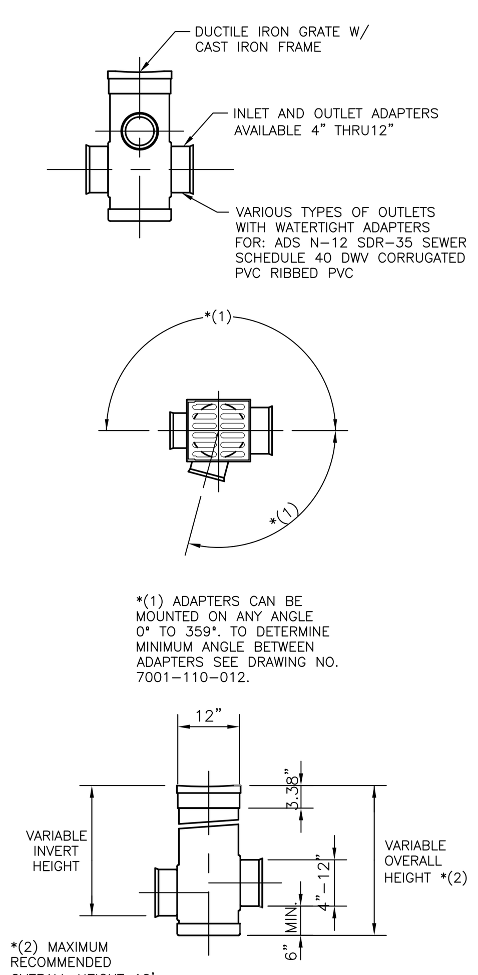

12" DRAIN BASIN

YARD DRAIN BASIN DETAIL
N.T.S.

RECORD DRAWINGS
DATE: 8/20/06

THESE RECORD DRAWINGS ARE INTENDED TO DISPLAY THE COMPLETED WORK SUBSTANTIALLY AS CONSTRUCTED. THEY ARE BASED ON DATA PROVIDED TO THE ENGINEER, AND CERTIFIED BY, A REGISTERED PROFESSIONAL SURVEYOR AND MAPPER. FIELD VERIFICATION OF CONDITIONS AND LOCATIONS SHOULD BE UNDERTAKEN PRIOR TO ALTERATION OR CONSTRUCTION IN THE PROJECT AREA. 01/07/03

⚠7 *WATER AND SEWER ONLY (PHASE 2A)* 08/20/06
⚠9 *PAVING, GRADING, AND DRAINAGE (PHASE 2A)* 10/05/06
⚠13 *WATER AND SEWER ONLY (PHASE 2B)* 12/14/06
⚠14 *PAVING, GRADING, AND DRAINAGE (PHASE 2B-1)* 12/14/06

REV NO.	REVISION	DATE	DRAWN BY / EMP. NO.	CHECKED BY / EMP. NO.
14	RECORD DRAWING REVISION - PAVING, GRADING, AND DRAINAGE - PHASE 2B	12/14/06	MPO/2348	
10	REVISED FOR UTILITIES CONVEYANCE	12/14/06	MPO/2348	
6	REVISED FOR UTILITY DEVIATION	6/20/06	RRM/1482	
3	REVISED PER FDEP COMMENTS AND PER ENGINEER	3/22/06	RRM/1482	
1	REVISED PER COLLIER COUNTY COMMENTS	9/28/05	RRM/1482	

Feb 06, 2008 22:46:02 TDASILVA|X:\ENG\N0442\150-QuarryPhase2\Rev14-rcrdPaving&Drainage\044215032.dwg

ACTIVITY	INITIALS/EMP. NO.	DATE
DESIGNED BY:	LMG/894	4/15/05
DRAWN BY:	RRM/1482	4/15/05
CHECKED BY:		
CONTRACT ADMIN. BY:		
WM APPROVED BY:		

WilsonMiller
WilsonMiller, Inc. - FL Lic.# LC-C000170
WilsonMiller, Inc. - Certificate of Authorization #43
Planners • Engineers • Ecologists • Surveyors • Landscape Architects • Transportation Consultants
WilsonMiller, Inc.
Naples • Fort Myers • Sarasota • Bradenton • Tampa • Tallahassee
4571 Colonial Boulevard, Suite 100 • Fort Myers, Florida 33912 • Phone 239-939-1020 • Fax 239-939-3412 • Web-Site www.wilsonmiller.com

CLIENT: CENTEX HOMES
PROJECT: THE QUARRY PHASE 2

DATE: FEB 2005
HORIZONTAL SCALE: AS NOTED
VERTICAL SCALE: AS NOTED
SEC: TWP: RGE: 14, 23 48S 26E

TITLE: PAVING & DRAINAGE DETAILS

CROSS REFERENCE FILE NO.: D-0442-48
PROJECT NUMBER: N0442-509-000

LISA M. GIORDANO
LICENSE # 59318
INDEX NUMBER: D-0442-150
SHEET NUMBER: 32 OF 38

2216 Altamont Avenue
Fort Myers, Florida 33901
Phone: 239.332.5499
Fax: 239.332.2955

www.cphcorp.com

June 6, 2023

Timothy Cantwell
Quarry CDD
c/o Inframark
210 N. University Drive, Suite 702
Coral Springs, FL 33071

Re: Notice to QCA: Stormwater System Modification that are affecting the as built system that require remediation Copper Canyon Ct. Localized Flooding.

Tim:

Per your request, CPH provides the following potential solutions to address the localized flooding issues affecting the properties listed in your Memorandum to the Quarry Homeowner's Association dated May 18, 2023:

- 9381 & 9385 Copper Canyon
  - Remove existing landscape and re-dig swale to meet original design.
  - Partial landscape removal with underground stormwater pipe and yard drain installation to move stormwater run-off from these two lots to the existing swale.

- 9389 Copper Canyon
  - Remove and replace existing brick pathway to match original design swale contours / grades.
  - Install drainage pipes under existing brick pathway
  - Re-dig swale to meet original design and construct a bridge type structure / path to cross the swale and connect to boat dock.

- 9405 Copper Canyon
  - Adjust proposed pathway to meet original swale design contours / elevations.

A copy of the Phase-2 drainage design drawings prepared by Wilson Miller are attached for reference

Please do not hesitate to contact us if you have any questions.

Albert Lopez
Project Manager

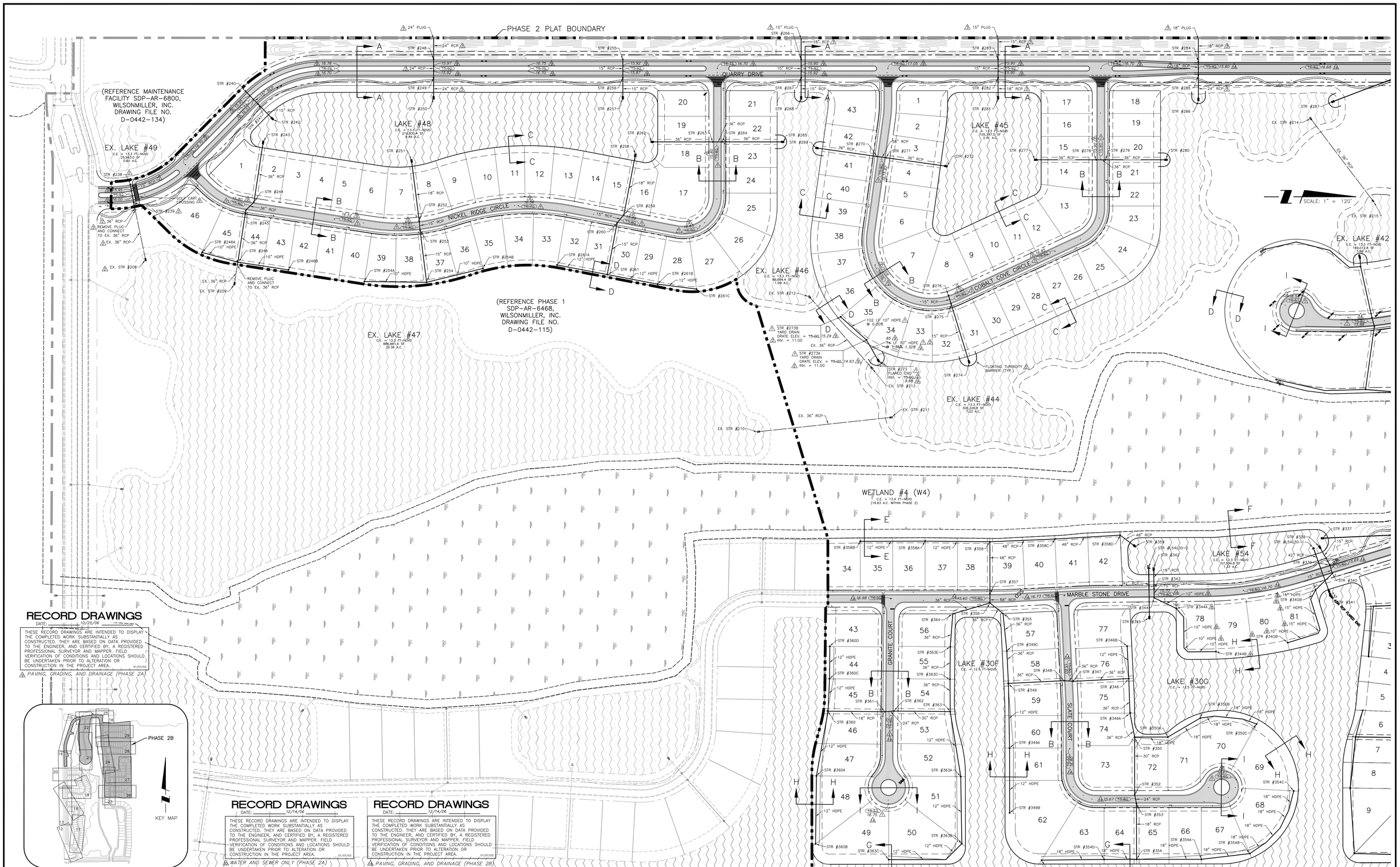

REV NO.	REVISION	DATE	DRAWN BY / EMP. NO.	CHECKED BY / EMP. NO.
14	RECORD DRAWING REVISION – PAVING, GRADING, AND DRAINAGE – PHASE 2B	12/14/06	MPO/2348	
10	REVISED FOR UTILITIES CONVEYANCE	12/14/06	MPO/2348	
9	RECORD DRAWING REVISION – PAVING, GRADING, AND DRAINAGE – PHASE 2A	10/25/06	MPO/2348	
8	REVISED STORM DRAINS PER CLIENT AND ENGINEER	10/5/06	RRM/1482	
5	REVISED PER ENGINEER & OWNER	6/3/06	RRM/1482	
4	REVISED FOR INSUBSTANTIAL CHANGE	5/4/06	RRM/1482	
3	REVISED PER FDEP COMMENTS AND PER ENGINEER	3/22/06	RRM/1482	
2	REVISED PER ENGINEER & COUNTY COMMENTS	11/29/05	RRM/1482	
1	REVISED PER COLLIER COUNTY COMMENTS	9/28/05	RRM/1482	

Apr 26, 2007 - 11:54:10 MCLEARY(X:\ENG\N0442\150-Quarry Phase 2\Rev13 Rcrd -Asbuilt All - Phase 2B\044215004.dwg

ACTIVITY	INITIALS/EMP. NO.	DATE
DESIGNED BY:	LMG/894	4/15/05
DRAWN BY:	RRM/1482	4/15/05
CHECKED BY:		
CONTRACT ADMIN. BY:		
WM APPROVED BY:		

WilsonMiller
Planners - Engineers - Ecologists - Surveyors - Landscape Architects - Transportation Consultants
WilsonMiller, Inc.
Naples - Fort Myers - Sarasota - Bradenton - Tampa - Tallahassee
4571 Colonial Boulevard, Suite 100 - Fort Myers, Florida 33912 - Phone 239-939-1020 - Fax 239-939-2402 - Web-Site www.wilsonmiller.com
WilsonMiller, Inc. - FL Lic # LC-0000170
WilsonMiller, Inc. - Certificate of Authorization #43

CLIENT: CENTEX HOMES
PROJECT: THE QUARRY PHASE 2

DATE: FEB 2005
HORIZONTAL SCALE: 1" = 120'
VERTICAL SCALE: N/A
SEC: 14, 23 TWP: 48S RGE: 26E
CROSS REFERENCE FILE NO.: D-0442-48

TITLE: MASTER PAVING, GRADING & DRAINAGE PLAN (SOUTH)

PROJECT NUMBER: N0442-509-000

LISA M. GIORDANO
LICENSE # 59318

INDEX NUMBER: D-0442-150

SHEET NUMBER: 4 OF 38

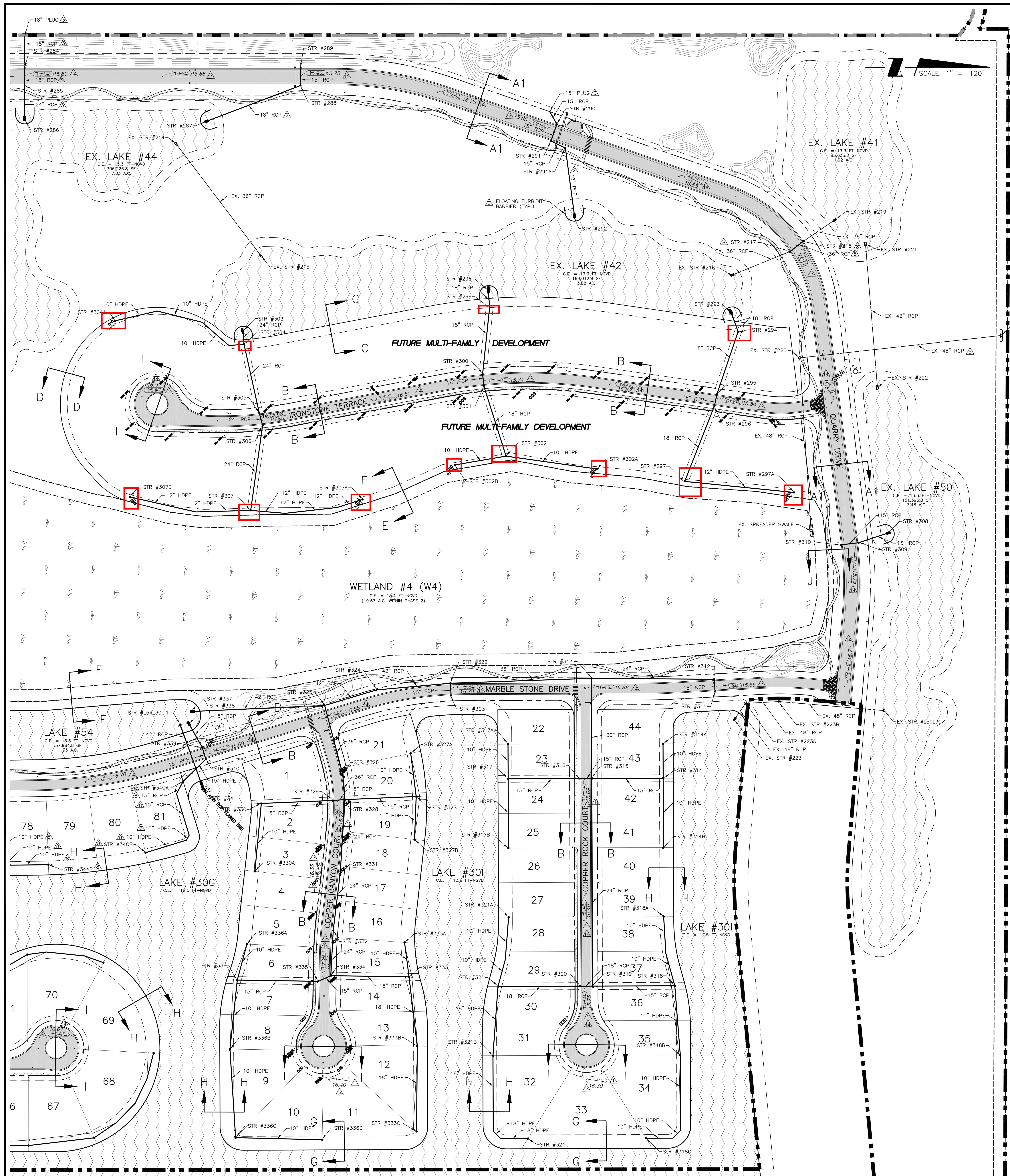

14	RECORD DRAWING REVISION – PAVING, GRADING, AND DRAINAGE – PHASE 2B	12/14/06	MPO/2348
10	REVISED FOR UTILITIES CONVEYANCE	12/14/06	MPO/2348
8	REVISED STORM DRAINS PER CLIENT AND ENGINEER	10/5/06	RRM/1482
5	REVISED PER ENGINEER & OWNER	6/3/06	RRM/1482
4	REVISED FOR INSUBSTANTIAL CHANGE	5/4/06	RRM/1482
3	REVISED PER FDEP COMMENTS AND PER ENGINEER	3/22/06	RRM/1482
2	REVISED PER ENGINEER & COUNTY COMMENTS	11/29/05	RRM/1482
1	REVISED PER COLLIER COUNTY COMMENTS	9/28/05	RRM/1482
REV NO.	REVISION	DATE	DRAWN BY / EMP. NO.	CHECKED BY / EMP. NO.

Feb 19, 2007 - 10:26:33 RMARTENS|X:\ENG\N0442\150-Quarry Phase 2\Rev13 Rcrd Water and Sewer Phase 2B\044215005.dwg

ACTIVITY	INITIALS/EMP. NO.	DATE
DESIGNED BY:	LMG/894	4/15/05
DRAWN BY:	RRM/1482	4/14/05
CHECKED BY:		
CONTRACT ADMIN. BY:		
WM APPROVED BY:		

WilsonMiller
WilsonMiller, Inc. – FL Lic.# LC-C000170
WilsonMiller, Inc. – Certificate of Authorization #43
Planners • Engineers • Ecologists • Surveyors • Landscape Architects • Transportation Consultants
WilsonMiller, Inc.
Naples • Fort Myers • Sarasota • Bradenton • Tampa • Tallahassee
4571 Colonial Boulevard, Suite 100 • Fort Myers, Florida 33912 • Phone 239-939-1020 • Fax 239-939-3412 • Web-Site www.wilsonmiller.com

CLIENT: CENTEX HOMES

PROJECT: THE QUARRY PHASE 2

DATE: FEB 2005
HORIZONTAL SCALE: 1" = 120'
VERTICAL SCALE: N/A
SEC: TWP: RGE: 14, 23 48S 26E

TITLE: MASTER PAVING, GRADING, & DRAINAGE PLAN (NORTH)

CROSS REFERENCE FILE NO.: D-0442-48
PROJECT NUMBER: N0442-509-000

LISA M. GIORDANO
LICENSE # 59318

INDEX NUMBER: D-0442-150
SHEET NUMBER: 5 OF 38

DEVELOPMENT STANDARDS

NOTE: ALL LOTS PROPOSED WITHIN PHASE 2 ARE SINGLE FAMILY DETACHED.

PER THE HERITAGE BAY PLANNED UNIT DEVELOPMENT, ORDINANCE NO. 03-40, THE MINIMUM DIMENSIONS REQUIRED FOR SINGLE FAMILY DETACHED ARE:

		SINGLE FAMILY DETACHED
MIN. LOT AREA		5,000 SQ. FT.
MIN. LOT WIDTH[5]		50 FT.
MIN. AVERAGE SITE DEPTH[9]		100 FT.
FRONT YARD[1, 7, 12] SETBACK	PRINCIPAL & ACCESSORY	20 FT.
	GARAGE FRONT/ SIDE ENTRY	23 FT./10 FT.
	GARAGE OR CARPORT ON PARKING LOT ACCESSWAY	N/A
REAR YARD SETBACK[6, 7]	PRINCIPAL	10 FT.
	ACCESSORY 2, 10, 11, 12	5 FT.
SIDE YARD SETBACK PRINCIPAL & ACCESSORY 2, 4, 7, 8, 10, 11, 12		6 FT.
PRESERVE SETBACK	PRINCIPAL	25 FT.
	ACCESSORY	10 FT.
MAX. HEIGHT[3]		35 FT.
DISTANCE BETWEEN PRINCIPAL STRUCTURES		10 FT.
MIN. FLOOR AREA		1,000 SQ. FT.

NOTES:

1. FRONT YARDS FOR DWELLINGS AND SIDE-ENTRY GARAGES ARE MEASURED FROM BACK OF CURB OR EDGE OF PAVEMENT (IF NOT CURBED). FRONT YARDS FOR A FRONT LOADED GARAGE ARE MEASURED FROM GARAGE DOOR TO BACK OF CURB, EDGE OF PAVEMENT OR SIDEWALK, WHICHEVER IS CLOSER TO THE GARAGE DOOR.
2. WHERE ADJACENT TO A GOLF COURSE, LAKE (MEASURED FROM TOP OF BANK), OR OPEN SPACE REDUCED TO 0 FEET.
3. BUILDING HEIGHT – SEE SECTION 1.8.
4. ALL ZERO LOT LINE UNITS IN A SERIES SHALL HAVE THE 0-FOOT SIDE SETBACK ON THE SAME SIDE OF THE LOT. THE ZERO FOOT SETBACK SIDE MAY CHANGE ONLY IF A MINIMUM 10 FOOT WIDE SPACE IS PROVIDED IN THE FORM OF AN EASEMENT, GOLF COURSE CROSSING, OR THE LIKE, WHICH SEPARATE THE LOTS.
5. MINIMUM LOT WIDTH MAY BE REDUCED BY 29% FOR CUL-DE-SAC LOTS PROVIDED MINIMUM LOT AREA REQUIREMENTS ARE MET.
6. FOR ANY LOT SERVED BOTH BY A STREET AND AN ALLEY, THE LOT LINE ADJACENT TO THE ALLEY SHALL BE TREATED AS A REAR LOT LINE AND THE SETBACK SHALL BE MEASURED FROM THE EDGE OF PAVEMENT.
7. GUESTHOUSES OR CABANA BEDROOMS ARE SUBJECT TO THE SETBACK REQUIREMENTS FOR PRINCIPAL STRUCTURES.
8. THE SIDE CORNER SETBACK SHALL BE THE SAME AS THE REQUIRED SIDE PRINCIPAL STRUCTURE SETBACK.
9. SITE DEPTH AVERAGE-DETERMINED BY DIVIDING THE SITE AREA BY THE SITE WIDTH.
10. ACCESSORY POOL ENCLOSURE/SCREEN LANAI SETBACK MAY BE REDUCED TO 0 FEET WHEN ATTACHED TO COMMON PRIVACY WALL.
11. ACCESSORY POOL ENCLOSURE/SCREEN LANAI SETBACK FROM LAKE MAINTENANCE EASEMENT MAY BE REDUCED TO 0 FEET.
12. COMMON ARCHITECTURAL FEATURES SUCH ARCHWAYS, ARBORS, AND COURTYARD ENTRY FEATURES SHALL BE EXEMPT FROM THE MINIMUM YARD REQUIREMENTS LISTED ABOVE.
13. FOR THE PURPOSE OF TABLE 2, THE TERM "MULTI-FAMILY BUILDING" INCLUDES ASSISTED LIVING FACILITIES.

LAND USE SUMMARY

	SQUARE FOOTAGE	ACREAGE	PERCENTAGE OF TOTAL AREA
IMPERVIOUS AREAS:			
* RESIDENTIAL (ROOF/DRIVEWAY)	858,000.00	19.70	9.4%
PAVEMENT & CURB	540,439.81	12.41	5.9%
SIDEWALK	83,495.21	1.92	0.9%
**FUTURE MULTI-FAMILY TRACT	238,000.00	5.46	2.6%
PERVIOUS AREAS:			
*RESIDENTIAL	1,769,907.90	40.63	19.4
LAKE	1,095,333.00	25.15	12.0%
OPEN SPACE	1,208,720.90	27.75	13.2%
GOLF COURSE (PREVIOUSLY PERMITTED)	2,195,535.70	50.40	24.1%
PRESERVE	855,050.00	19.63	9.4%
**FUTURE MULTI-FAMILY TRACT	284,844.00	6.54	3.1%
TOTAL	9,129,326.50	209.59	100%

* ASSUMED 5,500 SQ. FT. IMPERVIOUS PER SINGLE FAMILY LOT.
** ASSUMED 8,500 SQ. FT. IMPERVIOUS PER MULT-FAMILY BUILDING.

DENSITY

PER SECTION 1.7 OF THE HERITAGE BAY PUD, COLLIER COUNTY ORDINANCE NO. 03-40, A MAXIMUM OF 3,450 DWELLING UNITS AND AN ASSISTED LIVING FACILITY CONTAINING UP TO 200 UNITS MAY BE BUILT ON THE HERITAGE BAY PUD'S 2,562± ACRES. THE GROSS PROJECT DENSITY WILL BE A MAXIMUM OF 1.3 UNITS PER ACRE.

SURFACE WATER MANAGEMENT SUMMARY *

WATER MANAGEMENT PARAMETERS	B910	W4
CONTROL ELEVATION (FT-NGVD)	13.3	13.4
25-YEAR, 3-DAY RAINFALL (IN)	11.7	11.7
100-YEAR, 3-DAY RAINFALL (IN)	14.7	14.7
PEAK 25-YEAR, 3-DAY STORM STAGE (FT-NGVD)	15.6	14.9
PEAK 100-YEAR, 3-DAY ZERO DISCHARGE STORM STAGE (FT-NGVD)	16.0	15.5
FEMA ELEVATION (FT-NGVD)	ZONE X	ZONE X
MINIMUM RECOMMENDED ROAD CROWN ELEVATION (FT-NGVD)	15.6	N/A
MINIMUM RECOMMENDED FINISHED FLOOR ELEVATION (FT-NGVD)	17.1	N/A
MINIMUM RECOMMENDED TOP OF PERIMETER BERM ELEVATION (FT-NGVD)	15.6	14.9

* REFERENCE HERITAGE BAY SFWMD PERMIT NO. 11-02234-P

RECORD DRAWINGS

DATE: 12/14/06

THESE RECORD DRAWINGS ARE INTENDED TO DISPLAY THE COMPLETED WORK SUBSTANTIALLY AS CONSTRUCTED. THEY ARE BASED ON DATA PROVIDED TO THE ENGINEER, AND CERTIFIED BY, A REGISTERED PROFESSIONAL SURVEYOR AND MAPPER. FIELD VERIFICATION OF CONDITIONS AND LOCATIONS SHOULD BE UNDERTAKEN PRIOR TO ALTERATION OR CONSTRUCTION IN THE PROJECT AREA. 01/07/03

PAVING, GRADING, AND DRAINAGE (PHASE 2B)

RECORD DRAWINGS

DATE: 12/14/06

THESE RECORD DRAWINGS ARE INTENDED TO DISPLAY THE COMPLETED WORK SUBSTANTIALLY AS CONSTRUCTED. THEY ARE BASED ON DATA PROVIDED TO THE ENGINEER, AND CERTIFIED BY, A REGISTERED PROFESSIONAL SURVEYOR AND MAPPER. FIELD VERIFICATION OF CONDITIONS AND LOCATIONS SHOULD BE UNDERTAKEN PRIOR TO ALTERATION OR CONSTRUCTION IN THE PROJECT AREA. 01/07/03

WATER AND SEWER ONLY (PHASE 2A)

GENERAL NOTES:

1.) ELEVATIONS ARE BASED ON NATIONAL GEODETIC VERTICAL DATUM (NGVD).
2.) A PRECONSTRUCTION MEETING SHALL TAKE PLACE WITH COLLIER COUNTY ENGINEERING SERVICES PRIOR TO THE START OF CONSTRUCTION.
3.) THIS PLAN WAS BASED ON FIELD INFORMATION AND AVAILABLE RECORD DRAWING INFORMATION. IT IS THE CONTRACTOR'S RESPONSIBILITY TO DETERMINE THE EXACT LOCATION OF EXISTING INFRASTRUCTURE PRIOR TO CONSTRUCTION AND PROVIDE (IN WRITING) ANY DISCREPANCIES TO THE ENGINEER.
4.) THIS PLAN IS NOT INTENDED TO BE ALL INCLUSIVE OF EXISTING FACILITIES OR MATERIALS TO BE REMOVED. CONTRACTOR SHALL BE RESPONSIBLE FOR VERIFICATION OF EXISTING CONDITIONS WITH REGARDS TO SITE MODIFICATIONS NECESSARY TO ACCOMMODATE THE PROPOSED IMPROVEMENTS. ALL ITEMS TO BE REMOVED SHALL BECOME THE PROPERTY OF THE CONTRACTOR AND SHALL BE REMOVED AT THE EXPENSE OF THE CONTRACTOR, INCLUDING ALL DUMPING FEES, UNLESS OTHERWISE NOTED.
5.) COLLIER COUNTY PUBLIC UTILITIES, FLORIDA POWER AND LIGHT, UNITED TELEPHONE SERVICE, TECO GAS AND CATV MAY HAVE EXISTING UTILITIES ADJACENT TO THIS PROPOSED CONSTRUCTION. CONTRACTOR SHALL CONTACT THE RESPECTIVE UTILITIES TO LOCATE THEIR FACILITIES PRIOR TO COMMENCEMENT OF CONSTRUCTION.
6.) CONTRACTOR SHALL VERIFY ALL DIMENSIONS AND ELEVATIONS PRIOR TO COMMENCEMENT OF CONSTRUCTION. ANY DEVIATION IN PLAN INFORMATION SHALL BE REPORTED TO ENGINEER IMMEDIATELY.
7.) CONTRACTOR IS REQUIRED TO OBTAIN FROM THE ENGINEER WRITTEN APPROVAL FOR ANY DEVIATIONS FROM THE PLANS AND/OR SPECIFICATIONS.
8.) CONTRACTOR SHALL COMPLY WITH THE REQUIREMENTS OF THE COLLIER COUNTY GROUNDWATER PROTECTION ORDINANCE NO. 91-103, SECTION 4.10.1.1.2A.
9.) THE CONTRACTOR IS RESPONSIBLE FOR OBTAINING A DEWATERING PERMIT FROM SOUTH FLORIDA WATER MANAGEMENT DISTRICT AS REQUIRED.
10.) THE CONTRACTOR IS RESPONSIBLE FOR OBTAINING A NATIONAL POLLUTANT DISCHARGE ELIMINATION SYSTEM (NPDES) GENERAL PERMIT FROM THE UNITED STATES ENVIRONMENTAL PROTECTION AGENCY. ACCORDINGLY, THE CONTRACTOR IS ALSO RESPONSIBLE FOR CREATING, IMPLEMENTING AND MAINTAINING A STORM WATER POLLUTION PREVENTION PLAN AS PER THE REQUIREMENTS OF THE NPDES GENERAL PERMIT.
11.) CONTRACTOR SHALL BE RESPONSIBLE FOR MAINTAINING TRAFFIC AND USAGE OF THE EXISTING STREETS ADJACENT TO THE PROJECT. ALL TRAFFIC MAINTENANCE CONTROL SHALL BE IN ACCORDANCE WITH FLORIDA MANUAL OF TRAFFIC CONTROL AND SAFE PRACTICES FOR STREET CONSTRUCTION, MAINTENANCE, AND UTILITY OPERATIONS.
12.) UNDERGROUND CONTRACTOR SHALL MINIMIZE THE WORK AREA AND WIDTH OF TRENCHES TO AVOID DISTURBANCES OF NATURAL VEGETATION. SPOIL FROM TRENCHES SHALL BE PLACED ONLY ON PREVIOUSLY CLEARED AREAS OR AS DIRECTED BY THE OWNER. CONTRACTOR SHALL NOT REMOVE AND/OR DISTURB ANY TREES AND/OR SHRUBS WITHOUT PRIOR APPROVAL BY OWNER AND ANY FEDERAL, LOCAL, AND STATE PERMITS AS REQUIRED.
13.) ALL UNDERGROUND UTILITIES AND INFRASTRUCTURE LOCATED BENEATH THE STABILIZED PORTION OF THE ROAD BED SHALL BE INSTALLED PRIOR TO COMPACTION OF THE SUBGRADE OR AS OTHERWISE DIRECTED BY OWNER.
14.) THE CONTRACTOR SHALL REPAIR AND REPLACE ALL AREAS DISTURBED BY CONSTRUCTION TO EXISTING CONDITIONS.
15.) THE CONTRACTOR SHALL PROVIDE 48 HOURS WRITTEN NOTICE TO THE ENGINEER AND COLLIER COUNTY PRIOR TO THE FOLLOWING:
   A. COMMENCEMENT.
   B. CHANGES TO APPROVED SCHEDULES, SUBCONTRACTORS, OR RESIDENT SUPERINTENDENT.
   C. GENERAL.
      1. COMPACTION.
      2. TRENCH DENSITY.
      3. FINAL INSPECTIONS.
   D. OTHERS AS MAY BE REQUIRED BY OWNER, COUNTY AND ENGINEER.
16.) ALL MATERIALS AND CONSTRUCTION METHODS USED FOR THE PROPOSED IMPROVEMENTS SHALL CONFORM TO THE APPROVED TECHNICAL SPECIFICATIONS, AND ALL FEDERAL, STATE AND LOCAL REGULATIONS.
17.) DURING CONSTRUCTION, CATCH BASIN OPENINGS, WHERE APPROPRIATE, SHALL BE COVERED WITH FILTER FABRIC (MIRAFI 140N OR APPROVED EQUAL) TO PREVENT DEBRIS AND FILL FROM FALLING INTO THE INLET.
18.) PRIVATE STREETS, WATER MANAGEMENT FACILITIES, COMMON AREAS, OPEN SPACE, AND AMENITIES SHALL BE OWNED AND MAINTAINED BY PROPERTY OWNER'S ASSOCIATION, ITS SUCCESSORS AND ASSIGNS.
19.) THE REVIEW AND APPROVAL OF THESE IMPROVEMENT PLANS DOES NOT AUTHORIZE THE CONSTRUCTION OF REQUIRED IMPROVEMENTS WHICH ARE INCONSISTENT WITH EXISTING EASEMENTS OF RECORD.
20.) THE PROPERTY OWNER IS RESPONSIBLE FOR PERPETUAL MAINTENANCE OF ALL FEATURES OF THE SURFACE WATER MANAGEMENT SYSTEM AS OUTLINED BY THE DESIGN ENGINEER ON THESE DRAWINGS.
21.) THE PROPERTY OWNER IS RESPONSIBLE FOR THE REPLACEMENT OF ALL DEAD LANDSCAPE MATERIAL AND FOR THE MAINTENANCE OF THE REQUIRED IRRIGATION SYSTEM.
22.) THE CONTRACTOR SHALL BE RESPONSIBLE FOR OBTAINING COPIES OF AND COMPLYING WITH ALL PERMITS OBTAINED BY THE OWNER.
23.) CONTRACTOR SHALL BE RESPONSIBLE FOR COORDINATING WITH THE APPROPRIATE UTILITY COMPANIES FOR SERVICE CONNECTIONS FOR THE PROJECT.

LEGEND

(symbol)	LAKE
(symbol)	PROPOSED PAVEMENT
(symbol)	CONCRETE SIDEWALK
C.E.	CONTROL ELEVATION
(symbol)	PHASE 2 PLAT BOUNDARY

PRESERVE AREA SUMMARY

	AREA OF PRESERVE (AC)
W1	658.14
W2	110.18
W4	38.06
HERITAGE BAY COMMONS (W3)	54.4
HERITAGE BAY	9.5
TOTAL	870.3

NOTE: PER THE HERITAGE BAY P.U.D., A MINIMUM OF 863.0 ACRES OF PRESERVE ARE TO BE PROVIDED.

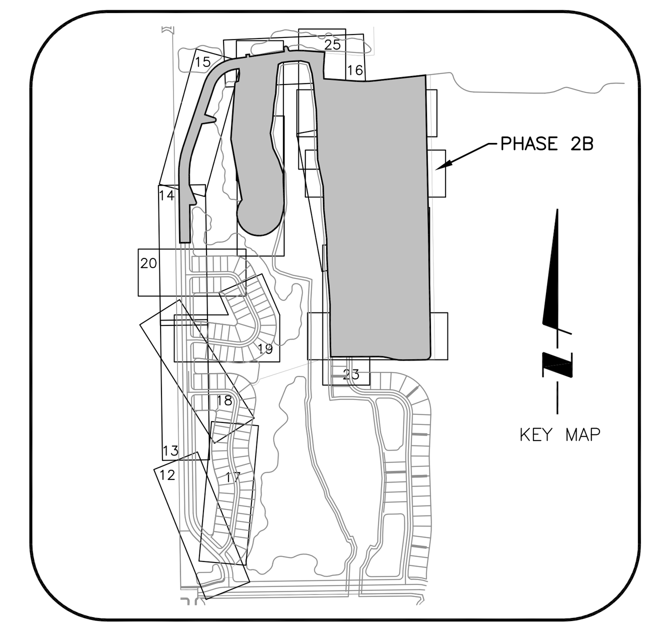

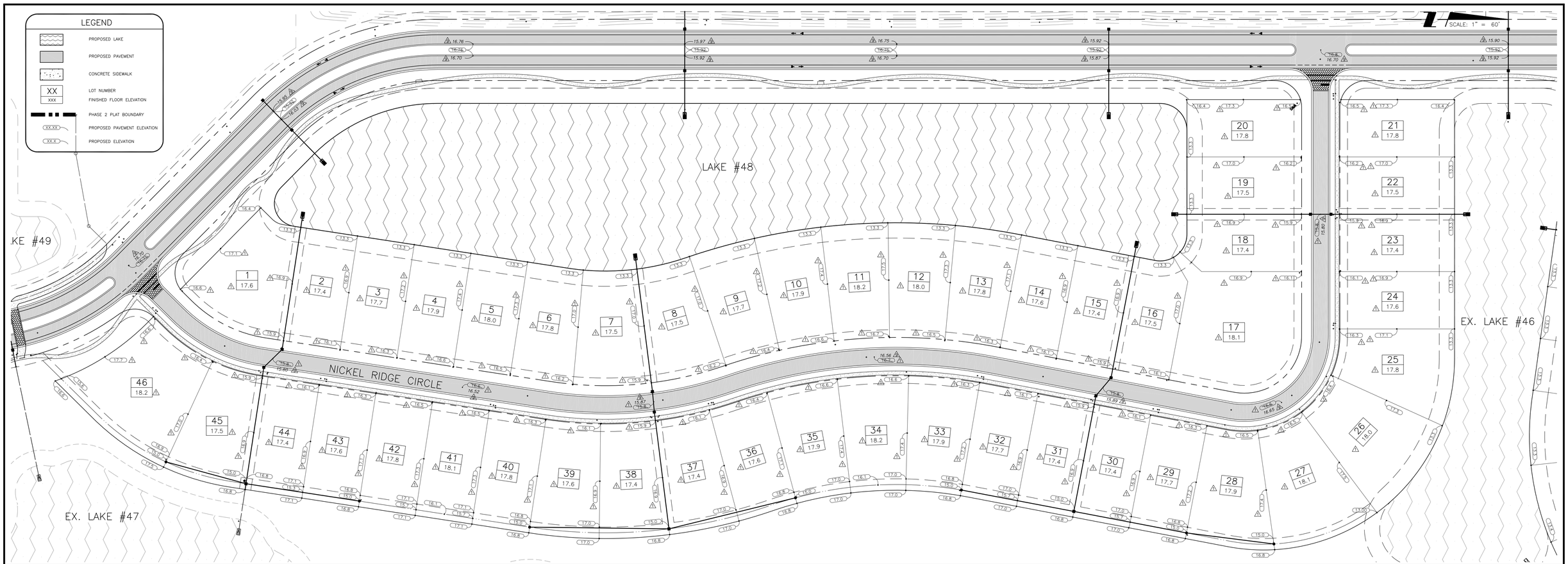

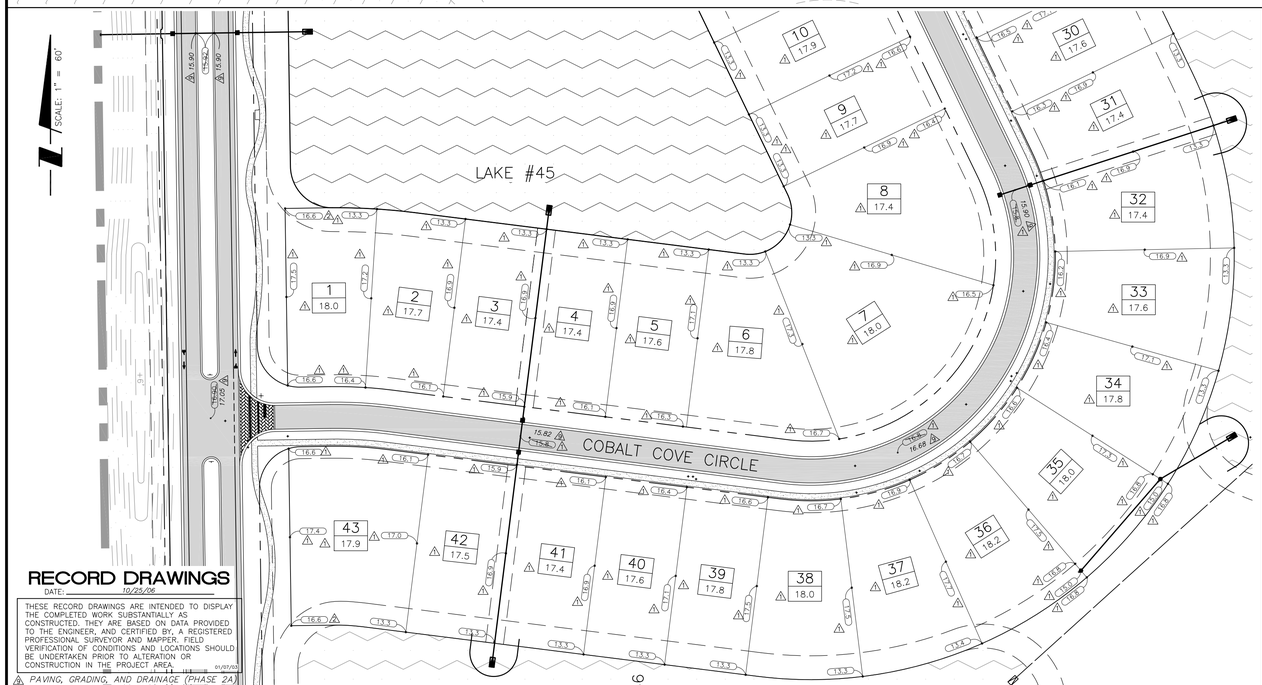

RECORD DRAWINGS
DATE: 10/25/06
THESE RECORD DRAWINGS ARE INTENDED TO DISPLAY THE COMPLETED WORK SUBSTANTIALLY AS CONSTRUCTED. THEY ARE BASED ON DATA PROVIDED TO THE ENGINEER, AND CERTIFIED BY, A REGISTERED PROFESSIONAL SURVEYOR AND MAPPER. FIELD VERIFICATION OF CONDITIONS AND LOCATIONS SHOULD BE UNDERTAKEN PRIOR TO ALTERATION OR CONSTRUCTION IN THE PROJECT AREA. 01/07/03

△ PAVING, GRADING, AND DRAINAGE (PHASE 2A)

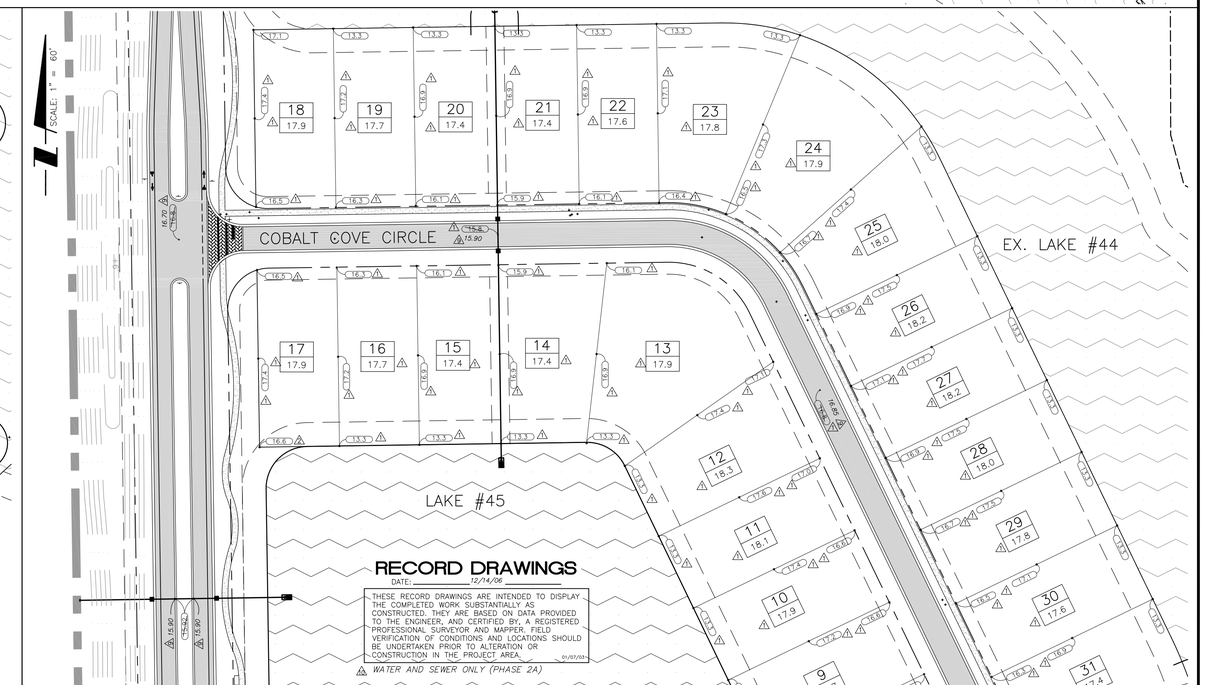

RECORD DRAWINGS
DATE: 12/14/06
THESE RECORD DRAWINGS ARE INTENDED TO DISPLAY THE COMPLETED WORK SUBSTANTIALLY AS CONSTRUCTED. THEY ARE BASED ON DATA PROVIDED TO THE ENGINEER, AND CERTIFIED BY, A REGISTERED PROFESSIONAL SURVEYOR AND MAPPER. FIELD VERIFICATION OF CONDITIONS AND LOCATIONS SHOULD BE UNDERTAKEN PRIOR TO ALTERATION OR CONSTRUCTION IN THE PROJECT AREA. 01/07/03

△ WATER AND SEWER ONLY (PHASE 2A)

10	REVISED FOR UTILITIES CONVEYANCE	12/14/06	MPO/2348		ACTIVITY	INITIALS/EMP. NO.	DATE
9	RECORD DRAWING REVISION – PAVING, GRADING, AND DRAINAGE – PHASE 2A	10/25/06	MPO/2348		DESIGNED BY:	LMG/894	4/15/05
4	REVISED FOR INSUBSTANTIAL CHANGE	5/4/06	RRM/1482		DRAWN BY:	RRM/1482	4/15/05
2	REVISED PER ENGINEER & COUNTY COMMENTS	11/29/05	RRM/1482		CHECKED BY:		
1	REVISED PER COLLIER COUNTY COMMENTS	9/28/05	RRM/1482		CONTRACT ADMIN. BY:		
△REV	NOv 29, 2007 REVISIONS 5.35	DATE	DRAWN BY / EMP. NO.	CHECKED BY / EMP. NO.	WM APPROVED BY:		

MILLERJYX:\ENG\N0442\150-Quarry Phase 2\Rev13 Rcrd Water and Sewer Phase 2B\044215010.dwg

WilsonMiller

WilsonMiller, Inc. – FL Lic.# LC-C000170
WilsonMiller, Inc. – Certificate of Authorization #43

Planners - Engineers - Ecologists - Surveyors - Landscape Architects - Transportation Consultants

WilsonMiller, Inc.
Naples - Fort Myers - Sarasota - Bradenton - Tampa - Tallahassee
4571 Colonial Boulevard, Suite 100 - Fort Myers, Florida 33912 - Phone 239-939-1020 - Fax 239-939-3412 - Web-Site www.wilsonmiller.com

CLIENT: CENTEX HOMES

PROJECT: THE QUARRY PHASE 2

DATE: FEB 2005
HORIZONTAL SCALE: 1" = 60'
VERTICAL SCALE: N/A
SEC: 14, 23 TWP: 48S RGE: 26E

TITLE: LOT GRADING PLAN (NICKEL RIDGE AND COBALT COVE)

CROSS REFERENCE FILE NO.: D-0442-48
PROJECT NUMBER: N0442-509-000

LISA M. GIORDANO
LICENSE # 59318
INDEX NUMBER: D-0442-150
SHEET NUMBER: 10 OF 38

RECORD DRAWINGS

DATE: 8/20/06

THESE RECORD DRAWINGS ARE INTENDED TO DISPLAY THE COMPLETED WORK SUBSTANTIALLY AS CONSTRUCTED. THEY ARE BASED ON DATA PROVIDED TO THE ENGINEER, AND CERTIFIED BY, A REGISTERED PROFESSIONAL SURVEYOR AND MAPPER. FIELD VERIFICATION OF CONDITIONS AND LOCATIONS SHOULD BE UNDERTAKEN PRIOR TO ALTERATION OR CONSTRUCTION IN THE PROJECT AREA. 01/07/03

- 7 WATER AND SEWER ONLY (PHASE 2A) 08/20/06
- 9 PAVING, GRADING, AND DRAINAGE (PHASE 2A) 10/05/06
- 13 WATER AND SEWER ONLY (PHASE 2B) 12/14/06
- 14 PAVING, GRADING, AND DRAINAGE (PHASE 2B-1) 12/14/06

14 NOTE: RECORD PAVEMENT ELEVATIONS ARE FOR 1ST LIFT OF ASPHALT ONLY.

LEGEND

- PROPOSED LAKE
- PROPOSED PAVEMENT
- CONCRETE SIDEWALK
- XX / XXX — LOT NUMBER / FINISHED FLOOR ELEVATION
- PHASE 2 PLAT BOUNDARY
- XX.XX — PROPOSED PAVEMENT ELEVATION
- XX.X — PROPOSED ELEVATION

LOT DIMENSIONS

NICKEL RIDGE

LOT#	LOT WIDTH	LOT DEPTH	AREA
1	104.8 LF.	150 LF.	0.37 Ac.
2	75 LF.	150 LF.	0.26 Ac.
3	75 LF.	150 LF.	0.26 Ac.
4	75 LF.	150 LF.	0.26 Ac.
5	75 LF.	150 LF.	0.26 Ac.
6	78.3 LF.	150 LF.	0.27 Ac.
7	86.4 LF.	150 LF.	0.30 Ac.
8	85.4 LF.	150 LF.	0.29 Ac.
9	80.4 LF.	150 LF.	0.28 Ac.
10	80.4 LF.	150 LF.	0.28 Ac.
11	80.4 LF.	150 LF.	0.28 Ac.
12	80.4 LF.	150 LF.	0.28 Ac.
13	80.5 LF.	150 LF.	0.28 Ac.
14	75 LF.	150 LF.	0.26 Ac.
15	75 LF.	150 LF.	0.26 Ac.
16	75 LF.	150 LF.	0.26 Ac.
17	224 LF.	150 LF.	0.55 Ac.
18	75 LF.	150 LF.	0.26 Ac.
19	75 LF.	150 LF.	0.26 Ac.
20	75 LF.	150 LF.	0.26 Ac.
21	75 LF.	150 LF.	0.26 Ac.
22	75 LF.	150 LF.	0.26 Ac.
23	75 LF.	150 LF.	0.26 Ac.
24	75 LF.	150 LF.	0.26 Ac.
25	94.7 LF.	154.8 LF.	0.34 Ac.
26	102.2 LF.	161.9 LF.	0.39 Ac.
27	102.1 LF.	160.9 LF.	0.38 Ac.
28	92.2 LF.	153.8 LF.	0.32 Ac.
29	75 LF.	150 LF.	0.26 Ac.
30	75 LF.	150 LF.	0.26 Ac.
31	75 LF.	150 LF.	0.26 Ac.
32	77.5 LF.	150 LF.	0.26 Ac.
33	82.6 LF.	150 LF.	0.28 Ac.
34	82.7 LF.	150 LF.	0.29 Ac.
35	82.6 LF.	150 LF.	0.28 Ac.
36	79.2 LF.	150 LF.	0.27 Ac.
37	82.1 LF.	150 LF.	0.28 Ac.
38	82.1 LF.	150 LF.	0.28 Ac.
39	82.8 LF.	150 LF.	0.28 Ac.
40	73.6 LF.	150 LF.	0.26 Ac.
41	75 LF.	150 LF.	0.26 Ac.
42	75 LF.	150 LF.	0.26 Ac.
43	75 LF.	150 LF.	0.26 Ac.
44	75 LF.	150 LF.	0.26 Ac.
45	89.4 LF.	150 LF.	0.31 aC.
46	138.9 LF.	150 LF.	0.46 aC.

COBALT COVE

LOT#	LOT WIDTH	LOT DEPTH	AREA
1	71.1 LF.	150 LF.	0.27 Ac.
2	70.2 LF.	150 LF.	0.24 Ac.
3	67 LF.	150 LF.	0.23 Ac.
4	67 LF.	150 LF.	0.23 Ac.
5	68.5 LF.	150 LF.	0.24 Ac.
6	86.9 LF.	150 LF.	0.31 Ac.
7	110 LF.	150 LF.	0.48 Ac.
8	93 LF.	150 LF.	0.35 Ac.
9	67 LF.	150 LF.	0.23 Ac.
10	67 LF.	150 LF.	0.23 Ac.
11	67 LF.	150 LF.	0.23 Ac.
12	67 LF.	150 LF.	0.23 Ac.
13	119.7 LF.	150 LF.	0.48 Ac.
14	68.5 LF.	150 LF.	0.24 Ac.
15	68.5 LF.	150 LF.	0.24Ac.
16	67 LF.	150 LF.	0.23 Ac.
17	67 LF.	150 LF.	0.23 Ac.
18	67 LF.	150 LF.	0.23 Ac.
19	67 LF.	150 LF.	0.23 Ac.
20	68.5 LF.	150 LF.	0.24 Ac.
21	68.5 LF.	150 LF.	0.24 Ac.
22	67 LF.	150 LF.	0.23 Ac.
23	88.8 LF.	150 LF.	0.32 Ac.
24	91.6 LF.	150 LF.	0.35 Ac.
25	81.5 LF.	150 LF.	0.28 Ac.
26	67 LF.	150 LF.	0.23 Ac.
27	67 LF.	150 LF.	0.23 Ac.
28	67 LF.	150 LF.	0.23 Ac.
29	68.5 LF.	150 LF.	0.24 Ac.
30	68.5 LF.	150 LF.	0.24 Ac.
31	85 LF.	150 LF.	0.26 Ac.
32	82.1 LF.	150 LF.	0.28 Ac.
33	81.9 LF.	150 LF.	0.28 Ac.
34	81.9 LF.	150 LF.	0.28 Ac.
35	81.9 LF.	150 LF.	0.28 Ac.
36	81.9 LF.	150 LF.	0.28 Ac.
37	81.9 LF.	150 LF.	0.28 Ac.
38	79.6 LF.	150 LF.	0.28 Ac.
39	68.5 LF.	150 LF.	0.24 Ac.
40	68.5 LF.	150 LF.	0.24 Ac.
41	67 LF.	150 LF.	0.23 Ac.
42	67 LF.	150 LF.	0.23 Ac.
43	122.8 LF.	150 LF.	0.42 Ac.

QUARRY SHORES SOUTH

LOT#	LOT WIDTH	LOT DEPTH	AREA
34	95 LF.	153 LF	0.33 Ac.
35	95 LF.	153 LF	0.33 Ac.
36	95 LF.	153 LF	0.33 Ac.
37	95 LF.	153 LF	0.33 Ac.
38	95 LF.	153 LF	0.33 Ac.
39	98.6 LF.	153 LF	0.34 Ac.
40	95 LF.	153 LF	0.33 Ac.
41	95 LF.	153 LF	0.34 Ac.
42	95.8 LF.	153 LF	0.34 Ac.
43	94.7 LF.	165 LF.	0.36 Ac.
44	95 LF.	165 LF.	0.36 Ac.
45	95 LF.	165 LF.	0.36 Ac.
46	95 LF.	165 LF.	0.39 Ac.
47	95 LF.	165 LF.	0.42 Ac.
48	138.3 LF.	165 LF.	0.55 Ac.
49	141.9 LF.	165 LF.	0.66 Ac.
50	141.9 LF.	165 LF.	0.66 Ac.
51	137.4 LF.	165 LF.	0.55 Ac.
52	95 LF.	165 LF.	0.42 Ac.
53	95 LF.	165 LF.	0.38 Ac.
54	95 LF.	165 LF.	0.36 Ac.
55	95 LF.	165 LF.	0.36 Ac.
56	94.9 LF.	165 LF.	0.36 Ac.
57	110.3 LF.	165 LF.	0.42 Ac.
58	95 LF.	165 LF.	0.36 Ac.
59	97.8 LF.	165 LF.	0.37 Ac.
60	95 LF.	165 LF.	0.36 Ac.
61	95 LF.	165 LF.	0.36 Ac.
62	171.9 LF.	189.6 LF.	0.87 Ac.
63	135 LF.	188.5 LF.	0.53 Ac.
64	95 LF.	165 LF.	0.36 Ac.
65	95 LF.	165 LF.	0.36 Ac.
66	95 LF.	165 LF.	0.36 Ac.
67	115.7 LF.	165 LF.	0.44 Ac.
68	151.1 LF.	165 LF.	0.60 Ac.
69	151.1 LF.	165 LF.	0.60 Ac.
70	135.5 LF.	165 LF.	0.53 Ac.
71	95 LF.	165 LF.	0.43 Ac.
72	97.5 LF.	165 LF.	0.36 Ac.
73	148.5 LF.	165 LF.	0.51 Ac.
74	95 LF.	165 LF.	0.36 Ac.
75	98 LF.	165 LF.	0.37 Ac.
76	95 LF.	165 LF.	0.36 Ac.
77	111 LF.	165 LF.	0.42 Ac.
78	113.9 LF.	170 LF.	0.44 Ac.
79	100.4 LF.	170 LF.	0.39 Ac.
80	100.4 LF.	170 LF.	0.39 Ac.
81	113.9 LF.	170 LF.	0.46 Ac.

QUARRY SHORES NORTH

LOT#	LOT WIDTH	LOT DEPTH	AREA
1	111 LF.	165 LF.	0.42 Ac.
2	82.4 LF.	165 LF.	0.31 Ac.
3	75 LF.	165 LF.	0.28 Ac.
4	75 LF.	165 LF.	0.28 Ac.
5	79.4 LF.	165 LF.	0.30 Ac.
6	77.9 LF.	165 LF.	0.31 Ac.
7	75 LF.	165 LF.	0.33 Ac.
8	75 LF.	165 LF.	0.30 Ac.
9	124 LF.	165 LF.	0.53 Ac.
10	123.5 LF.	165 LF.	0.52 Ac.
11	136 LF.	165 LF.	0.59 Ac.
12	122.8 LF.	165 LF.	0.51 Ac.
13	75 LF.	165 LF.	0.31 Ac.
14	75 LF.	165 LF.	0.33 Ac.
15	78.3 LF.	165 LF.	0.31 Ac.
16	76.4 LF.	165 LF.	0.29 Ac.
17	75 LF.	165 LF.	0.28 Ac.
18	75 LF.	165 LF.	0.28 Ac.
19	83.8 LF.	165 LF.	0.32 Ac.
20	84.3 LF.	165 LF.	0.32 Ac.
21	78.4 LF.	165 LF.	0.30 Ac.
22	75 LF.	165 LF.	0.28 Ac.
23	75 LF.	165 LF.	0.28 Ac.
24	75 LF.	165 LF.	0.28 Ac.
25	75 LF.	165 LF.	0.28 Ac.
26	75 LF.	165 LF.	0.28 Ac.
27	75 LF.	165 LF.	0.28 Ac.
28	75 LF.	165 LF.	0.29 Ac.
29	75 LF.	165 LF.	0.31 Ac.
30	75 LF.	165 LF.	0.33 Ac.
31	75 LF.	165 LF.	0.29 Ac.
32	127.6 LF.	165 LF.	0.65 Ac.
33	173.4 LF.	165 LF.	0.69 Ac.
34	127.6 LF.	165 LF.	0.65 Ac.
35	75 LF.	165 LF.	0.29 Ac.
36	75 LF.	165 LF.	0.33 Ac.
37	75 LF.	165 LF.	0.31 Ac.
38	75 LF.	165 LF.	0.29 Ac.
39	75 LF.	165 LF.	0.28 Ac.
40	75 LF.	165 LF.	0.28 Ac.
41	75 LF.	165 LF.	0.28 Ac.
42	75 LF.	165 LF.	0.28 Ac.
43	75 LF.	165 LF.	0.28 Ac.
44	75 LF.	165 LF.	0.28 Ac.

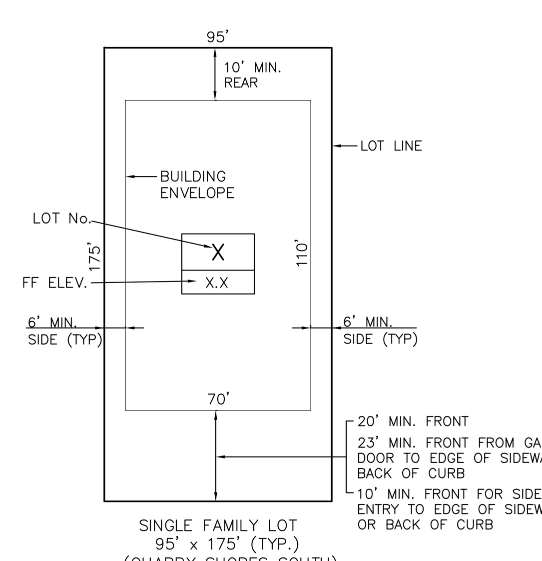

SINGLE FAMILY LOT
95' x 175' (TYP.)
(QUARRY SHORES SOUTH)

TYPICAL LOT CONFIGURATION
N.T.S.

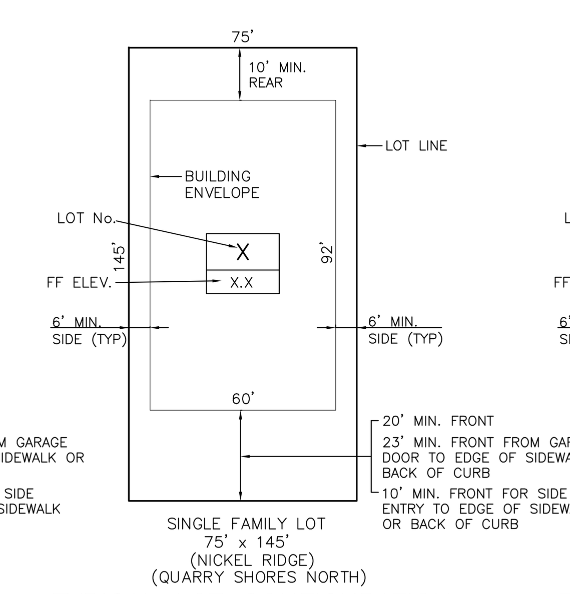

SINGLE FAMILY LOT
75' x 145'
(NICKEL RIDGE)
(QUARRY SHORES NORTH)

TYPICAL LOT CONFIGURATION
N.T.S.

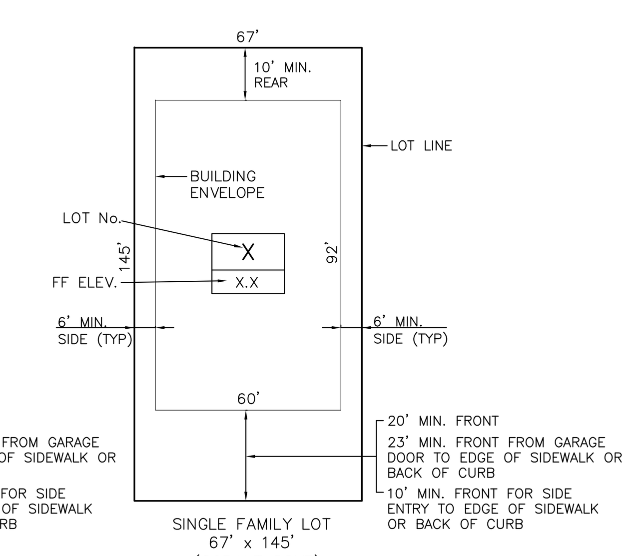

SINGLE FAMILY LOT
67' x 145'
(COBALT COVE)

TYPICAL LOT CONFIGURATION
N.T.S.

REV NO.	REVISION	DATE	DRAWN BY / EMP. NO.	CHECKED BY / EMP. NO.
14	RECORD DRAWING REVISION – PAVING, GRADING, AND DRAINAGE – PHASE 2B	12/14/06	MPO/2348	
10	REVISED FOR UTILITIES CONVEYANCE	12/14/06	MPO/2348	
8	REVISED DRAINAGE PER CLIENT AND ENGINEER	10/5/06	RRM/1482	
5	REVISED PER ENGINEER & OWNER	6/3/06	RRM/1482	
4	REVISED FOR INSUBSTANTIAL CHANGE	5/4/06	RRM/1482	
2	REVISED PER ENGINEER & COUNTY COMMENTS	11/29/05	RRM/1482	
1	REVISED PER COLLIER COUNTY COMMENTS	9/28/05	RRM/1482	

Feb 07, 2008 – 09:50:02 TDASILVA|X:\ENG\N0442\150-QuarryPhase2\Rev14-rcrdPaving&Drainage\044215011.dwg

ACTIVITY	INITIALS/EMP. NO.	DATE
DESIGNED BY:	LMG/894	4/15/05
DRAWN BY:	RRM/1482	4/15/05
CHECKED BY:		
CONTRACT ADMIN. BY:		
WM APPROVED BY:		

WilsonMiller

WilsonMiller, Inc. – FL Lic.# LC-C000170
WilsonMiller, Inc. – Certificate of Authorization #43

Planners • Engineers • Ecologists • Surveyors • Landscape Architects • Transportation Consultants

WilsonMiller, Inc.
Naples • Fort Myers • Sarasota • Bradenton • Tampa • Tallahassee
4571 Colonial Boulevard, Suite 100 • Fort Myers, Florida 33912 • Phone 239-939-1020 • Fax 239-939-3412 • Web-Site www.wilsonmiller.com

CLIENT: CENTEX HOMES

PROJECT: THE QUARRY PHASE 2

DATE: FEB 2005
HORIZONTAL SCALE: 1" = 80'
VERTICAL SCALE: N/A
SEC: TWP: RGE: 14, 23 48S 26E

TITLE: LOT GRADING PLAN (QUARRY SHORES)

CROSS REFERENCE FILE NO.: D-0442-48

PROJECT NUMBER: N0442-509-000

LISA M. GIORDANO
LICENSE # 59318

INDEX NUMBER: D-0442-150

SHEET NUMBER: 11 OF 38

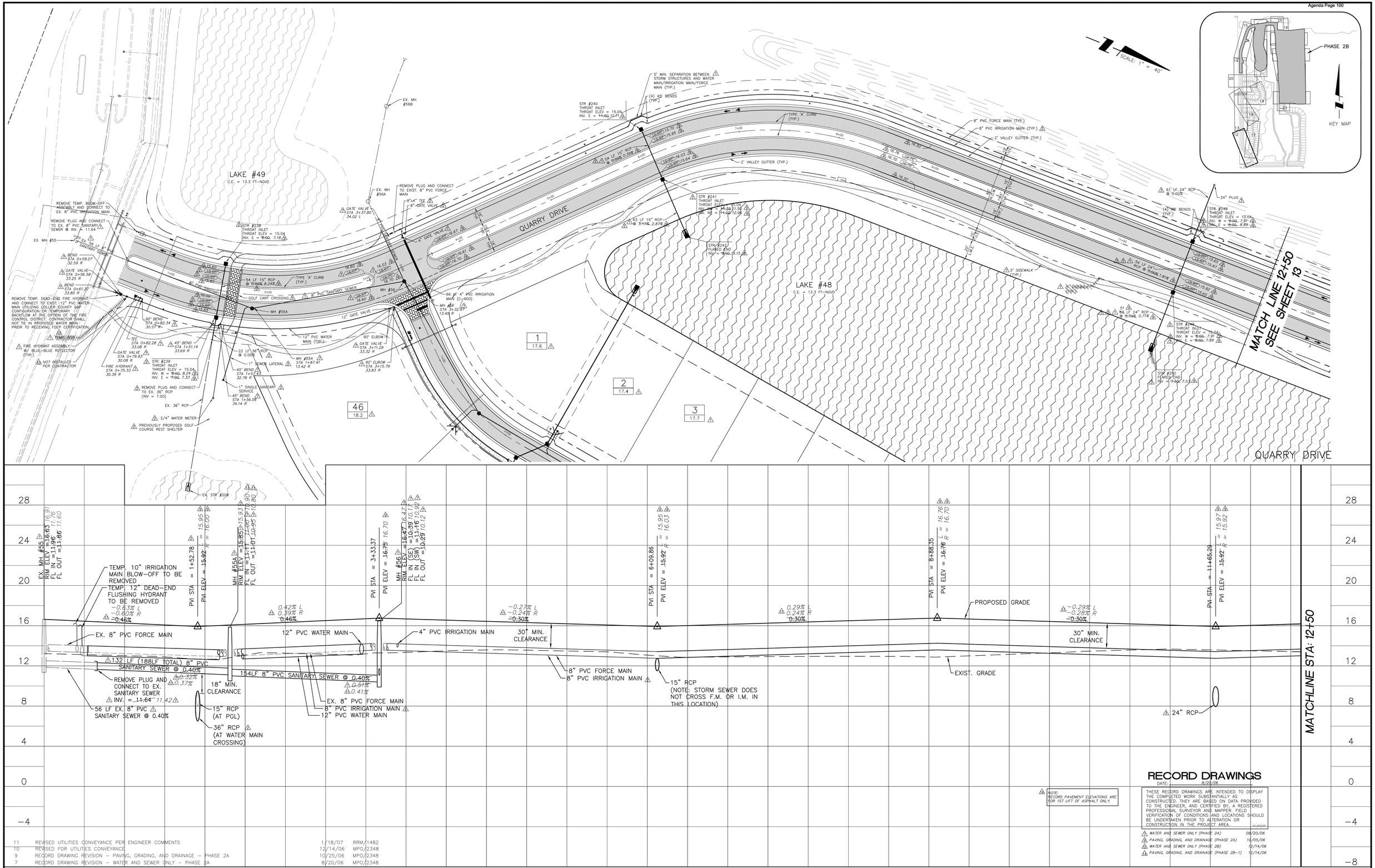

RECORD DRAWINGS
DATE: 8/28/06

NOTE: RECORD PAVEMENT ELEVATIONS ARE FOR 1ST LIFT OF ASPHALT ONLY.

THESE RECORD DRAWINGS ARE INTENDED TO DISPLAY THE COMPLETED WORK SUBSTANTIALLY AS CONSTRUCTED. THEY ARE BASED ON DATA PROVIDED TO THE ENGINEER, AND CERTIFIED BY, A REGISTERED PROFESSIONAL SURVEYOR AND MAPPER. FIELD VERIFICATION OF CONDITIONS AND LOCATIONS SHOULD BE UNDERTAKEN PRIOR TO ALTERATION OR CONSTRUCTION IN THE PROJECT AREA. 01/05/05

WATER AND SEWER ONLY (PHASE 2A) 08/20/06
PAVING, GRADING, AND DRAINAGE (PHASE 2A) 10/25/06
WATER AND SEWER ONLY (PHASE 2B) 12/14/06
PAVING, GRADING, AND DRAINAGE (PHASE 2B-1) 12/14/06

REV NO.	REVISION	DATE	DRAWN BY / EMP. NO.	CHECKED BY / EMP. NO.
11	REVISED UTILITIES CONVEYANCE PER ENGINEER COMMENTS	1/18/07	RRM/1482	
10	REVISED FOR UTILITIES CONVEYANCE	12/14/06	MPO/2348	
9	RECORD DRAWING REVISION – PAVING, GRADING, AND DRAINAGE – PHASE 2A	10/25/06	MPO/2348	
7	RECORD DRAWING REVISION – WATER AND SEWER ONLY – PHASE 2A	8/20/06	MPO/2348	
5	REVISED PER ENGINEER & OWNER	6/3/06	RRM/1482	
4	REVISED FOR INSUBSTANTIAL CHANGE	5/4/06	RRM/1482	
3	REVISED PER FDEP COMMENTS AND PER ENGINEER	3/22/06	RRM/1482	
2	REVISED PER ENGINEER & COLLIER COUNTY COMMENTS	11/29/05	RRM/1482	
1	REVISED PER COLLIER COUNTY COMMENTS	9/28/05	RRM/1482	

Feb 07, 2008 – 14:45:05 TDASILVA[X:\ENG\N0442\150-QuarryPhase2\Rev14-rcrdPaving&Drainage\044215012.dwg

ACTIVITY	INITIALS/EMP. NO.	DATE
DESIGNED BY:	LMG/894	4/15/05
DRAWN BY:	RRM/1482	4/15/05
CHECKED BY:		
CONTRACT ADMIN. BY:		
WM APPROVED BY:		

WilsonMiller
WilsonMiller, Inc. – FL Lic.# LC-C000170
WilsonMiller, Inc. – Certificate of Authorization #43
Planners - Engineers - Ecologists - Surveyors - Landscape Architects - Transportation Consultants
WilsonMiller, Inc.
Naples - Fort Myers - Sarasota - Bradenton - Tampa - Tallahassee
4571 Colonial Boulevard, Suite 100 - Fort Myers, Florida 33912 - Phone 239-939-1020 - Fax 239-939-3412 - Web-Site www.wilsonmiller.com

CLIENT: CENTEX HOMES
PROJECT: THE QUARRY PHASE 2

DATE: FEB 2005
HORIZONTAL SCALE: 1" = 40'
VERTICAL SCALE: 1" = 4'
SEC: 14, 23 TWP: 48S RGE: 26E
CROSS REFERENCE FILE NO.: D-0442-48

TITLE: PLAN AND PROFILE
QUARRY DRIVE
STA. 0+00 TO STA. 12+50

LISA M. GIORDANO
LICENSE # 59318
PROJECT NUMBER: N0442-509-000
INDEX NUMBER: D-0442-150
SHEET NUMBER: 12 OF 38

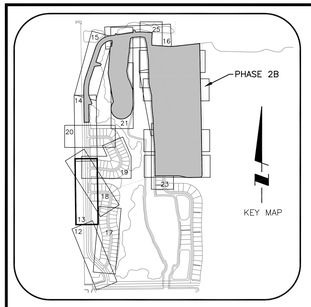

SCALE: 1" = 40'

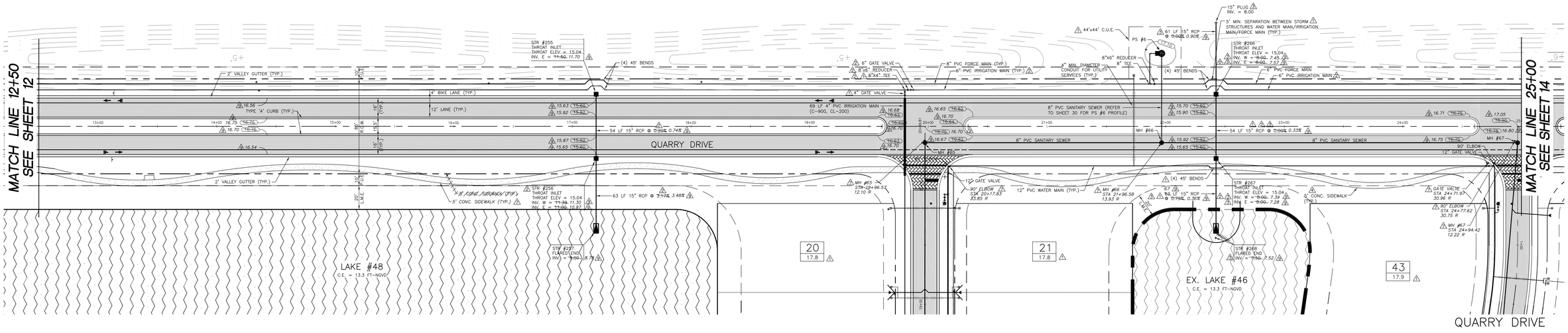

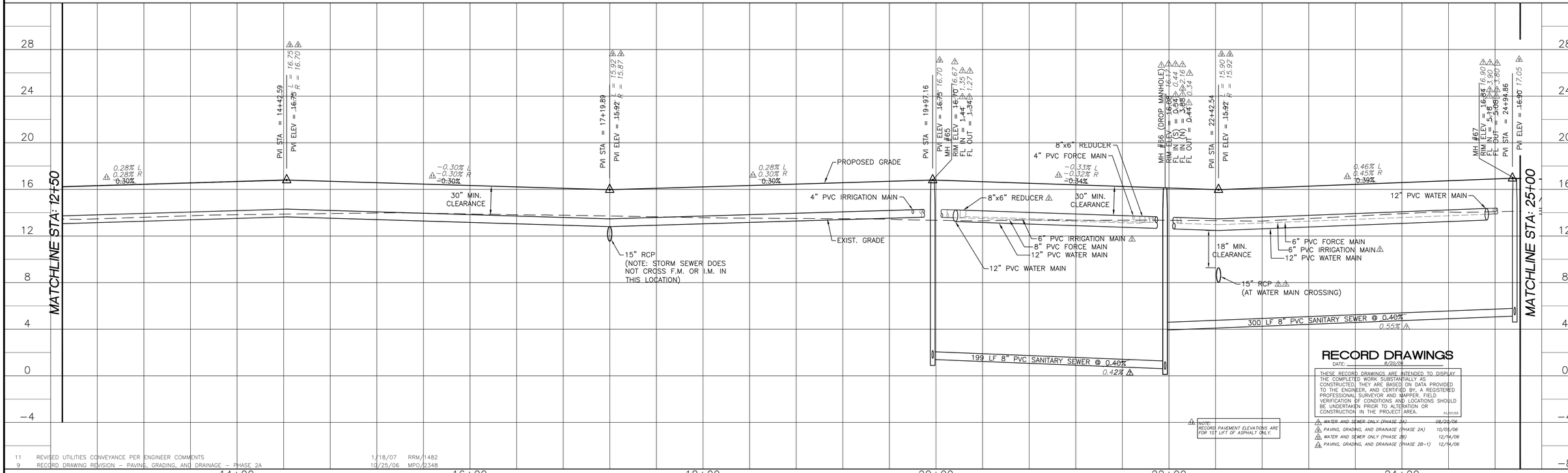

RECORD DRAWINGS
DATE: 8/20/08

THESE RECORD DRAWINGS ARE INTENDED TO DISPLAY THE COMPLETED WORK SUBSTANTIALLY AS CONSTRUCTED. THEY ARE BASED ON DATA PROVIDED TO THE ENGINEER, AND CERTIFIED BY, A REGISTERED PROFESSIONAL SURVEYOR AND MAPPER. FIELD VERIFICATION OF CONDITIONS AND LOCATIONS SHOULD BE UNDERTAKEN PRIOR TO ALTERATION OR CONSTRUCTION IN THE PROJECT AREA. 01/07/03

NOTE:
RECORD PAVEMENT ELEVATIONS ARE FOR 1ST LIFT OF ASPHALT ONLY.

WATER AND SEWER ONLY (PHASE 2A) 08/20/06
PAVING, GRADING, AND DRAINAGE (PHASE 2A) 10/03/06
WATER AND SEWER ONLY (PHASE 2B) 12/14/06
PAVING, GRADING, AND DRAINAGE (PHASE 2B-1) 12/14/06

REV NO.	REVISION	DATE	DRAWN BY / EMP. NO.	CHECKED BY / EMP. NO.
11	REVISED UTILITIES CONVEYANCE PER ENGINEER COMMENTS	1/18/07	RRM/1482	
9	RECORD DRAWING REVISION – PAVING, GRADING, AND DRAINAGE – PHASE 2A	10/25/06	MPO/2348	
7	RECORD DRAWING REVISION – WATER AND SEWER ONLY – PHASE 2A	8/14/06	MPO/2348	
4	REVISED FOR INSUBSTANTIAL CHANGE	5/4/06	RRM/1482	
3	REVISED PER FDEP COMMENTS AND PER ENGINEER	3/22/06	RRM/1482	
2	REVISED PER ENGINEER & COUNTY COMMENTS	11/29/05	RRM/1482	
1	REVISED PER COLLIER COUNTY COMMENTS	9/28/05	RRM/1482	

Feb 07, 2008 – 15:04:39 TDASILVA(K:\ENG\N0442\150-QuarryPhase2\Rev14-rcrdPaving&Drainage\044215013.dwg

ACTIVITY	INITIALS/EMP. NO.	DATE
DESIGNED BY:	LMG/894	4/15/05
DRAWN BY:	RRM/1482	4/15/05
CHECKED BY:		
CONTRACT ADMIN. BY:		
WM APPROVED BY:		

WilsonMiller
Planners - Engineers - Ecologists - Surveyors - Landscape Architects - Transportation Consultants
WilsonMiller, Inc.
Naples - Fort Myers - Sarasota - Bradenton - Tampa - Tallahassee
4571 Colonial Boulevard, Suite 100 - Fort Myers, Florida 33912 - Phone 239-939-1020 - Fax 239-939-3412 - Web-Site www.wilsonmiller.com
WilsonMiller, Inc. – FL Lic # LC-0000176
WilsonMiller, Inc. – Certificate of Authorization #43

CLIENT: CENTEX HOMES
PROJECT: THE QUARRY PHASE2

DATE: FEB 2005
HORIZONTAL SCALE: 1" = 40'
VERTICAL SCALE: 1" = 4'
SEC: 14, 23 TWP: 48S RGE: 26E
CROSS REFERENCE FILE NO.: D-0442-48
PROJECT NUMBER: N0442-509-000

TITLE: PLAN AND PROFILE
QUARRY DRIVE
12+50 TO 25+00

LISA M. GIORDANO
LICENSE # 59318
INDEX NUMBER: D-0442-150
SHEET NUMBER: 13 OF 38

SCALE: 1" = 40'

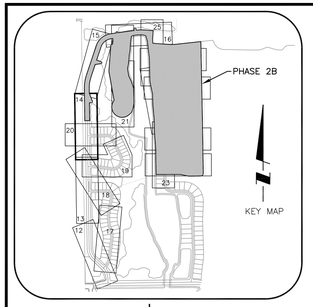

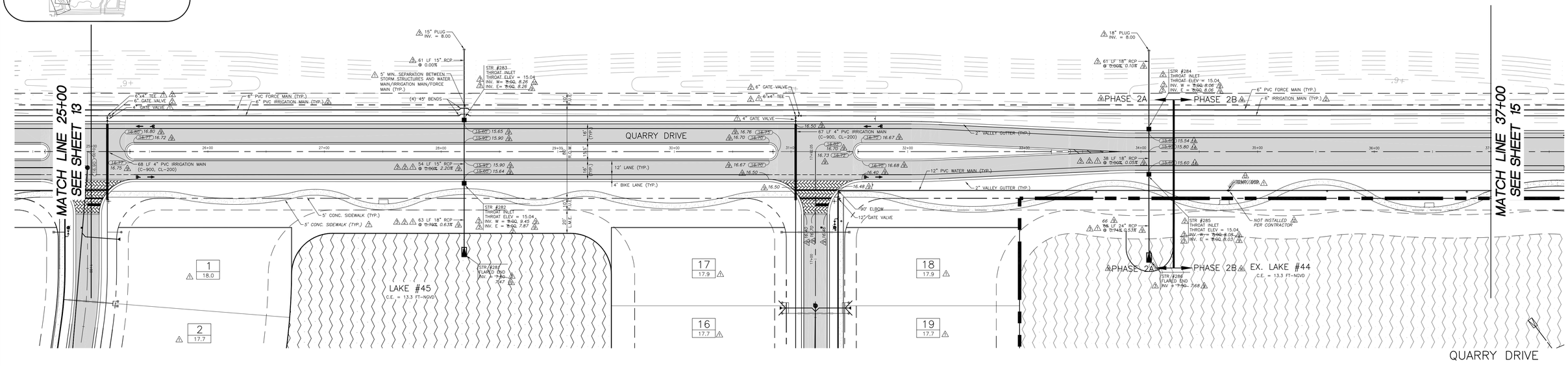

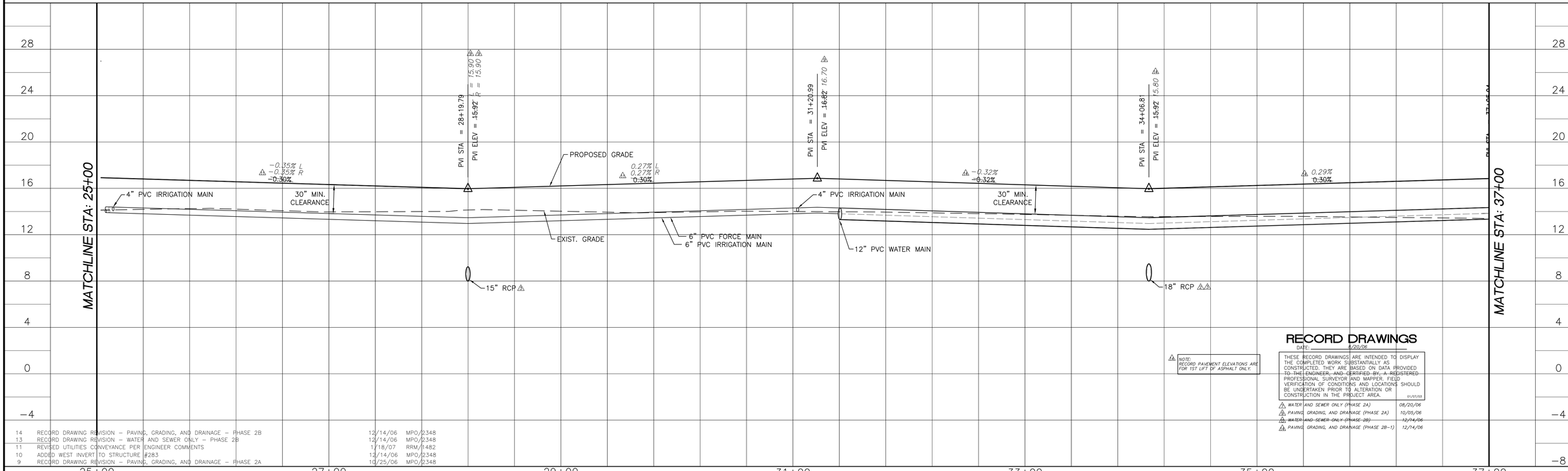

NOTE: RECORD PAVEMENT ELEVATIONS ARE FOR 1ST LIFT OF ASPHALT ONLY.

RECORD DRAWINGS

DATE: 8/20/06

THESE RECORD DRAWINGS ARE INTENDED TO DISPLAY THE COMPLETED WORK SUBSTANTIALLY AS CONSTRUCTED. THEY ARE BASED ON DATA PROVIDED TO THE ENGINEER, AND CERTIFIED BY, A REDISTERED PROFESSIONAL SURVEYOR AND MAPPER. FIELD VERIFICATION OF CONDITIONS AND LOCATIONS SHOULD BE UNDERTAKEN PRIOR TO ALTERATION OR CONSTRUCTION IN THE PROJECT AREA. 01/07/03

WATER AND SEWER ONLY (PHASE 2A)	08/20/06
PAVING, GRADING, AND DRAINAGE (PHASE 2A)	10/05/06
~~WATER AND SEWER ONLY (PHASE 2B)~~	~~12/14/06~~
PAVING, GRADING, AND DRAINAGE (PHASE 2B-1)	12/14/06

REV NO.	REVISION	DATE	DRAWN BY / EMP. NO.	CHECKED BY / EMP. NO.
14	RECORD DRAWING REVISION – PAVING, GRADING, AND DRAINAGE – PHASE 2B	12/14/06	MPO/2348	
13	RECORD DRAWING REVISION – WATER AND SEWER ONLY – PHASE 2B	12/14/06	MPO/2348	
11	REVISED UTILITIES CONVEYANCE PER ENGINEER COMMENTS	1/18/07	RRM/1482	
10	ADDED WEST INVERT TO STRUCTURE #283	12/14/06	MPO/2348	
9	RECORD DRAWING REVISION – PAVING, GRADING, AND DRAINAGE – PHASE 2A	10/25/06	MPO/2348	
7	RECORD DRAWING REVISION – WATER AND SEWER ONLY – PHASE 2A	8/14/06	MPO/2348	
4	REVISED FOR INSUBSTANTIAL CHANGE	5/4/06	RRM/1482	
3	REVISED PER FDEP COMMENTS AND PER ENGINEER	3/22/06	RRM/1482	
2	REVISED PER ENGINEER AND COUNTY COMMENTS	11/29/05	RRM/1482	
1	REVISED PER COLLIER COUNTY COMMENTS	9/28/05	RRM/1482	

Feb 07, 2008 – 17:52:01 TDASILVA(X:\ENG\N0442\150-QuarryPhase2\Rev14-rcrdPaving&Drainage\04215014.dwg

ACTIVITY	INITIALS/EMP. NO.	DATE
DESIGNED BY:	LMG/894	4/15/05
DRAWN BY:	RRM/1482	4/15/05
CHECKED BY:		
CONTRACT ADMIN. BY:		
WM APPROVED BY:		

WilsonMiller
WilsonMiller, Inc. – FL Lic # LC-C000170
WilsonMiller, Inc. – Certificate of Authorization #43
Planners · Engineers · Ecologists · Surveyors · Landscape Architects · Transportation Consultants
WilsonMiller, Inc.
Naples · Fort Myers · Sarasota · Bradenton · Tampa · Tallahassee
4571 Colonial Boulevard, Suite 100 · Fort Myers, Florida 33912 · Phone 239-939-1020 · Fax 239-939-3412 · Web-Site www.wilsonmiller.com

CLIENT: CENTEX HOMES

PROJECT: THE QUARRY PHASE 2

DATE: FEB 2005
HORIZONTAL SCALE: 1" = 40'
VERTICAL SCALE: 1" = 4'
SEC: 14, 23 TWP: 48S RGE: 26E
CROSS REFERENCE FILE NO.: D-0442-48

TITLE: PLAN AND PROFILE
QUARRY DRIVE
STA. 25+00 TO STA. 37+00

PROJECT NUMBER: N0442-509-000

LISA M. GIORDANO
LICENSE # 59318

INDEX NUMBER: D-0442-150

SHEET NUMBER: 14 OF 38

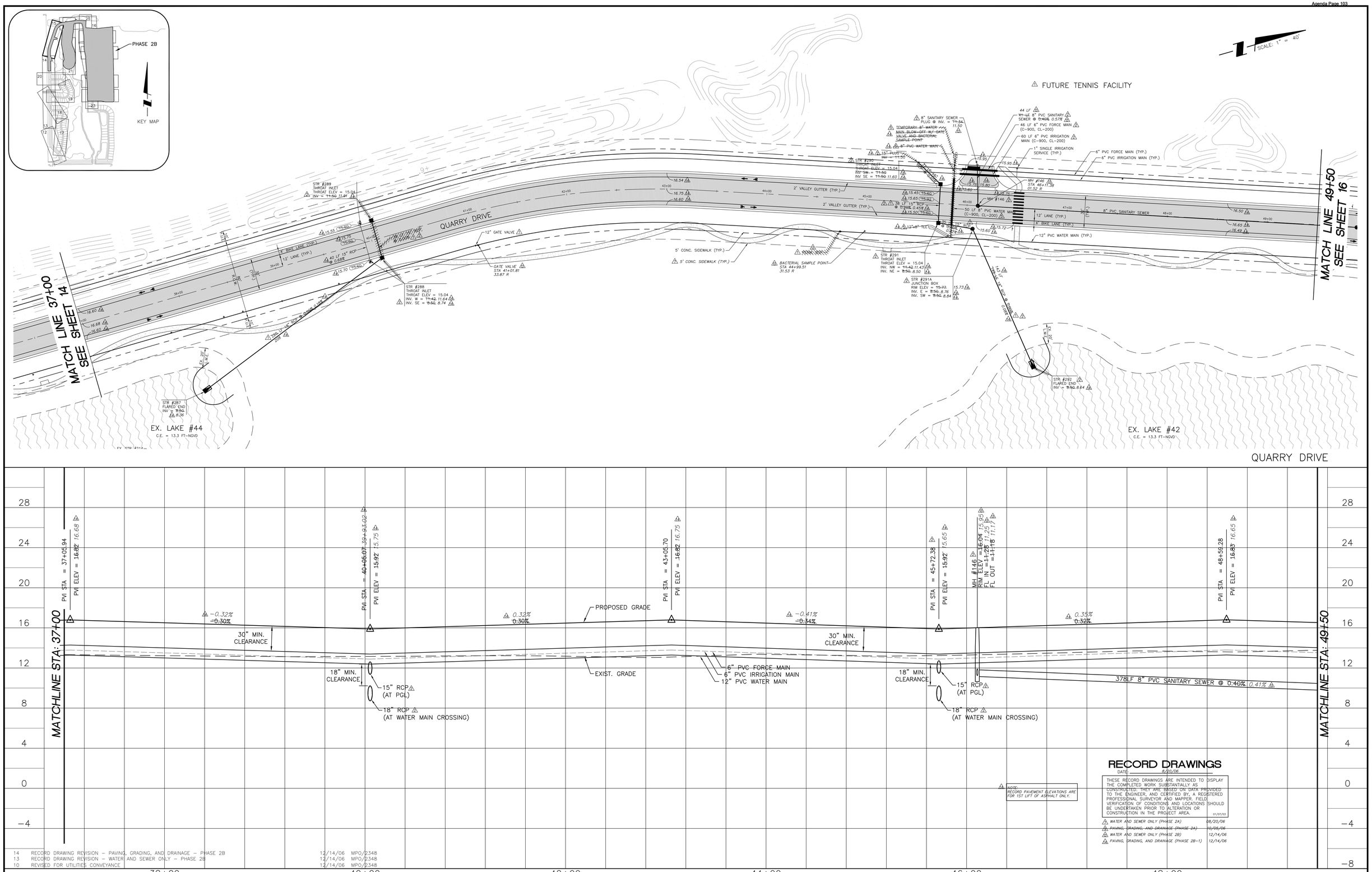

RECORD DRAWINGS

DATE: 8/20/06

THESE RECORD DRAWINGS ARE INTENDED TO DISPLAY THE COMPLETED WORK SUBSTANTIALLY AS CONSTRUCTED. THEY ARE BASED ON DATA PROVIDED TO THE ENGINEER, AND CERTIFIED BY, A REGISTERED PROFESSIONAL SURVEYOR AND MAPPER. FIELD VERIFICATION OF CONDITIONS AND LOCATIONS SHOULD BE UNDERTAKEN PRIOR TO ALTERATION OR CONSTRUCTION IN THE PROJECT AREA. 01/07/03

NOTE:
RECORD PAVEMENT ELEVATIONS ARE FOR 1ST LIFT OF ASPHALT ONLY.

WATER AND SEWER ONLY (PHASE 2A) 08/20/06
PAVING, GRADING, AND DRAINAGE (PHASE 2A) 10/05/06
WATER AND SEWER ONLY (PHASE 2B) 12/14/06
PAVING, GRADING, AND DRAINAGE (PHASE 2B-1) 12/14/06

REV NO.	REVISION	DATE	DRAWN BY / EMP. NO.	CHECKED BY / EMP. NO.
14	RECORD DRAWING REVISION – PAVING, GRADING, AND DRAINAGE – PHASE 2B	12/14/06	MPO/2348	
13	RECORD DRAWING REVISION – WATER AND SEWER ONLY – PHASE 2B	12/14/06	MPO/2348	
10	REVISED FOR UTILITIES CONVEYANCE	12/14/06	MPO/2348	
5	REVISED PER ENGINEER & OWNER	6/3/06	RRM/1482	
4	REVISED FOR INSUBSTANTIAL CHANGE	5/4/06	RRM/1482	
3	REVISED PER FDEP COMMENTS AND PER ENGINEER	3/22/06	RRM/1482	
2	REVISED PER ENGINEER AND COUNTY COMMENTS	11/29/05	RRM/1482	
1	REVISED PER COLLIER COUNTY COMMENTS	9/28/05	RRM/1482	

Feb 07, 2008 – 14:56:20 TDASILVA(X:\ENG\N0442\150-QuarryPhase2\Rev14-rcrdPaving&Drainage\04421501 5.dwg

ACTIVITY	INITIALS/EMP. NO.	DATE
DESIGNED BY:	LMG/894	4/15/05
DRAWN BY:	RRM/1482	04/15/05
CHECKED BY:		
CONTRACT ADMIN. BY:		
WM APPROVED BY:		

WilsonMiller, Inc. – FL Lic # LC-0000170
WilsonMiller, Inc. – Certificate of Authorization #43

WilsonMiller
Planners - Engineers - Ecologists - Surveyors - Landscape Architects - Transportation Consultants
WilsonMiller, Inc.
Naples - Fort Myers - Sarasota - Bradenton - Tampa - Tallahassee
4571 Colonial Boulevard, Suite 100 - Fort Myers, Florida 33912 - Phone 239-939-1020 - Fax 239-939-3412 - Web-Site www.wilsonmiller.com

CLIENT: CENTEX HOMES

PROJECT: THE QUARRY PHASE 2

DATE: FEB 2005
HORIZONTAL SCALE: 1" = 40'
VERTICAL SCALE: 1" = 4'
SEC: 14, 23 TWP: 48S RGE: 26E
CROSS REFERENCE FILE NO.: D-0442-48
PROJECT NUMBER: N0442-509-000

TITLE: PLAN AND PROFILE
QUARRY DRIVE
37+00 TO 49+50

LISA M. GIORDANO
LICENSE # 59318

INDEX NUMBER: D-0442-150

SHEET NUMBER: 15 OF 38

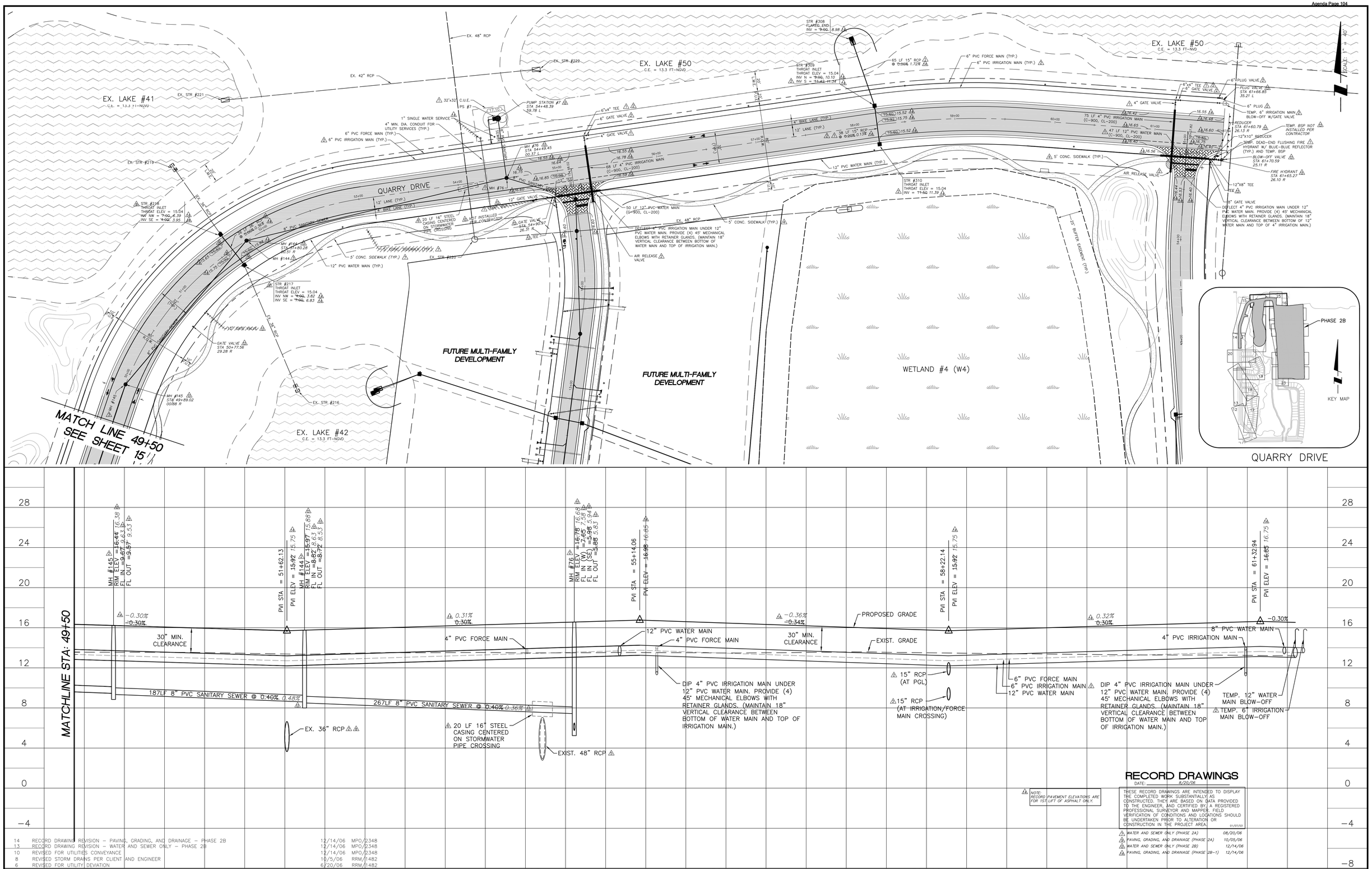

REV NO.	REVISION	DATE	DRAWN BY / EMP. NO.	CHECKED BY / EMP. NO.
14	RECORD DRAWING REVISION – PAVING, GRADING, AND DRAINAGE – PHASE 2B	12/14/06	MPO/2348	
13	RECORD DRAWING REVISION – WATER AND SEWER ONLY – PHASE 2B	12/14/06	MPO/2348	
10	REVISED FOR UTILITIES CONVEYANCE	12/14/06	MPO/2348	
8	REVISED STORM DRAINS PER CLIENT AND ENGINEER	10/5/06	RRM/1482	
6	REVISED FOR UTILITY DEVIATION	6/20/06	RRM/1482	
5	REVISED PER ENGINEER & OWNER	6/3/06	RRM/1482	
4	REVISED FOR INSUBSTANTIAL CHANGE	5/4/06	RRM/1482	
3	REVISED PER FDEP COMMENTS AND PER ENGINEER	3/22/06	RRM/1482	
2	REVISED PER ENGINEER & COUNTY COMMENTS	11/29/05	RRM/1482	
1	REVISED PER COLLIER COUNTY COMMENTS	9/28/05	RRM/1482	

Feb 19, 2008 – 12:05:59 TDASILVA(K:\ENG\N0442\150-QuarryPhase2\Rev14-rcrdPaving&Drainage\04421501 6.dwg

ACTIVITY	INITIALS/EMP. NO.	DATE
DESIGNED BY:	LMG/894	4/15/05
DRAWN BY:	RRM/1482	4/15/05
CHECKED BY:		
CONTRACT ADMIN. BY:		
WM APPROVED BY:		

WilsonMiller
WilsonMiller, Inc. – FL Lic # LC-0000170
WilsonMiller, Inc. – Certificate of Authorization #43
Planners - Engineers - Ecologists - Surveyors - Landscape Architects - Transportation Consultants
WilsonMiller, Inc.
Naples · Fort Myers · Sarasota · Bradenton · Tampa · Tallahassee
4571 Colonial Boulevard, Suite 100 · Fort Myers, Florida 33912 · Phone 239-939-1020 · Fax 239-939-3412 · Web-Site www.wilsonmiller.com

CLIENT: CENTEX HOMES
PROJECT: THE QUARRY PHASE 2

DATE: FEB 2005
HORIZONTAL SCALE: 1" = 40'
VERTICAL SCALE: 1" = 4'
SEC: 14, 23 TWP: 48S RGE: 26E
CROSS REFERENCE FILE NO.: D-0442-48

TITLE: PLAN AND PROFILE
QUARRY DRIVE
49+50 TO 61+67.49

PROJECT NUMBER: N0442-509-000

LISA M. GIORDANO
LICENSE # 59318
INDEX NUMBER: D-0442-150
SHEET NUMBER: 16 OF 38

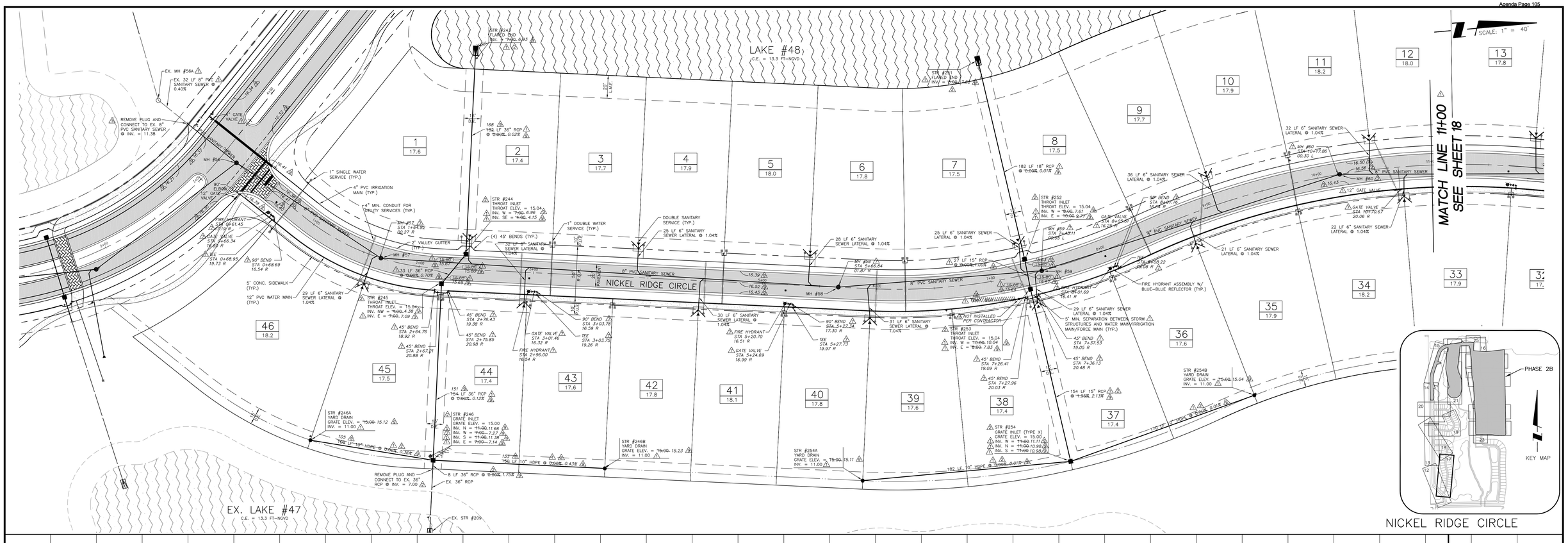

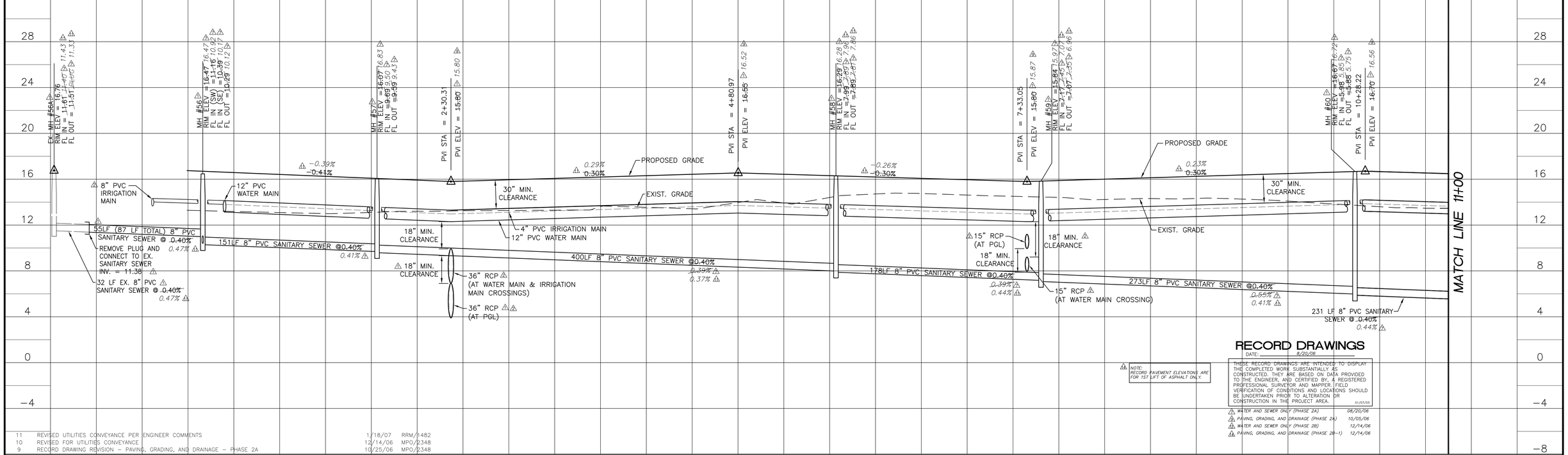

RECORD DRAWINGS

DATE: 8/20/06

THESE RECORD DRAWINGS ARE INTENDED TO DISPLAY THE COMPLETED WORK SUBSTANTIALLY AS CONSTRUCTED. THEY ARE BASED ON DATA PROVIDED TO THE ENGINEER, AND CERTIFIED BY, A REGISTERED PROFESSIONAL SURVEYOR AND MAPPER. FIELD VERIFICATION OF CONDITIONS AND LOCATIONS SHOULD BE UNDERTAKEN PRIOR TO ALTERATION OR CONSTRUCTION IN THE PROJECT AREA. 01/07/03

- WATER AND SEWER ONLY (PHASE 2A) 08/20/06
- PAVING, GRADING, AND DRAINAGE (PHASE 2A) 10/05/06
- WATER AND SEWER ONLY (PHASE 2B) 12/14/06
- PAVING, GRADING, AND DRAINAGE (PHASE 2B-1) 12/14/06

NOTE: RECORD PAVEMENT ELEVATIONS ARE FOR 1ST LIFT OF ASPHALT ONLY.

REV NO.	REVISION	DATE	DRAWN BY / EMP. NO.	CHECKED BY / EMP. NO.
11	REVISED UTILITIES CONVEYANCE PER ENGINEER COMMENTS	1/18/07	RRM/1482	
10	REVISED FOR UTILITIES CONVEYANCE	12/14/06	MPO/2348	
9	RECORD DRAWING REVISION – PAVING, GRADING, AND DRAINAGE – PHASE 2A	10/25/06	MPO/2348	
7	RECORD DRAWING REVISION – WATER AND SEWER ONLY – PHASE 2A	8/14/06	MPO/2348	
4	REVISED FOR INSUBSTANTIAL CHANGE	5/4/06	RRM/1482	
3	REVISED PER FDEP AND PER ENGINEER	3/22/06	RRM/1482	
2	REVISED PER ENGINEER & COUNTY COMMENTS	11/29/05	RRM/1482	
1	REVISED PER COLLIER COUNTY COMMENTS	9/28/05	RRM/1482	

Feb 07, 2008 – 14:51:46 TDASILVA(X:\ENG\N0442\150-QuarryPhase2\Rev14-rcrdPaving&Drainage\04421501 7.dwg

ACTIVITY	INITIALS/EMP. NO.	DATE
DESIGNED BY:	LMG/894	4/15/05
DRAWN BY:	RRM/1482	4/15/05
CHECKED BY:		
CONTRACT ADMIN. BY:		
WM APPROVED BY:		

WilsonMiller
Planners · Engineers · Ecologists · Surveyors · Landscape Architects · Transportation Consultants
WilsonMiller, Inc.
Naples · Fort Myers · Sarasota · Bradenton · Tampa · Tallahassee
4571 Colonial Boulevard, Suite 100 · Fort Myers, Florida 33912 · Phone 239-939-1020 · Fax 239-939-3412 · Web-Site www.wilsonmiller.com
WilsonMiller, Inc. – FL Lic # LC-0000170
WilsonMiller, Inc. – Certificate of Authorization #43

CLIENT: CENTEX HOMES

PROJECT: THE QUARRY PHASE 2

DATE: FEB 2005
HORIZONTAL SCALE: 1" = 40'
VERTICAL SCALE: 1" = 4'
SEC: 14, 23 TWP: 48S RGE: 26E
CROSS REFERENCE FILE NO.: D-0442-48

TITLE: PLAN AND PROFILE
NICKEL RIDGE CIRCLE
STA. 0+00 TO 11+00

PROJECT NUMBER: N0442-509-000

LISA M. GIORDANO
LICENSE # 59318
INDEX NUMBER: D-0442-150
SHEET NUMBER: 17 OF 38

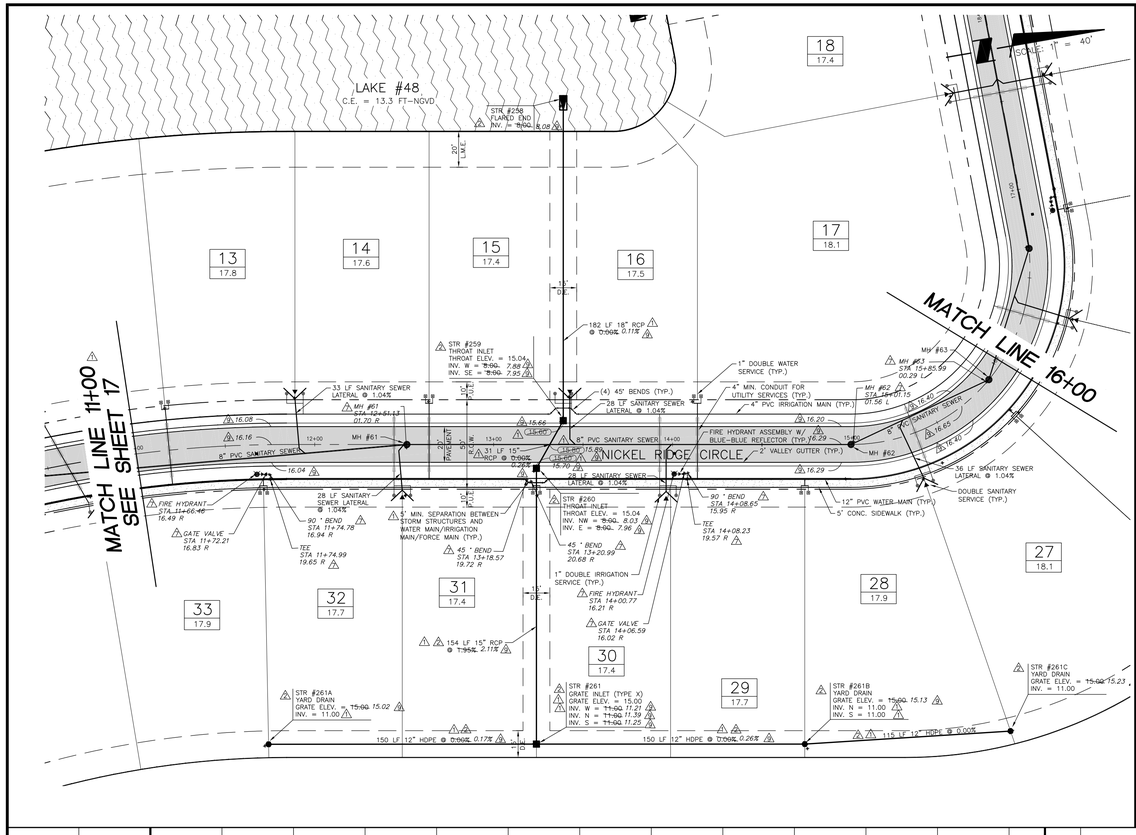

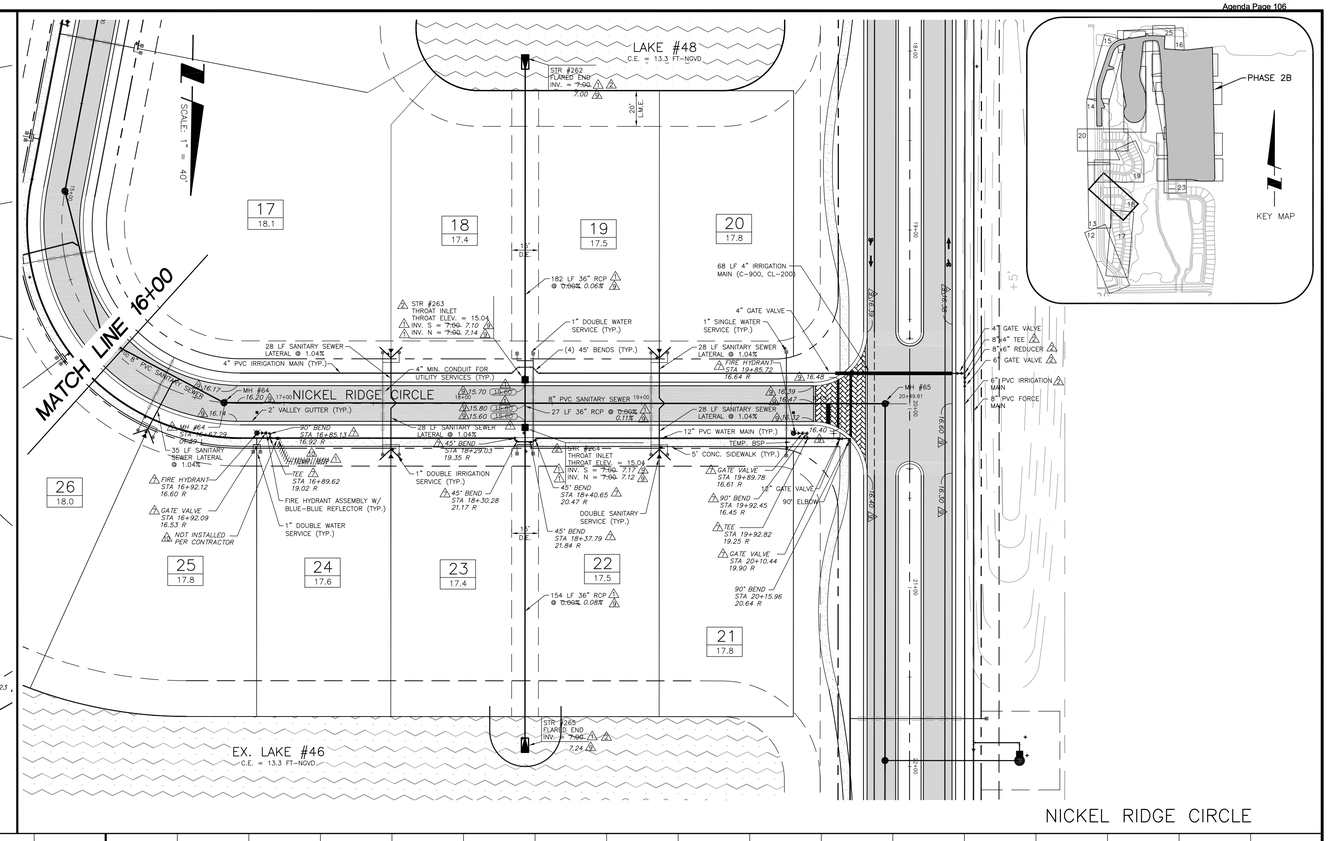

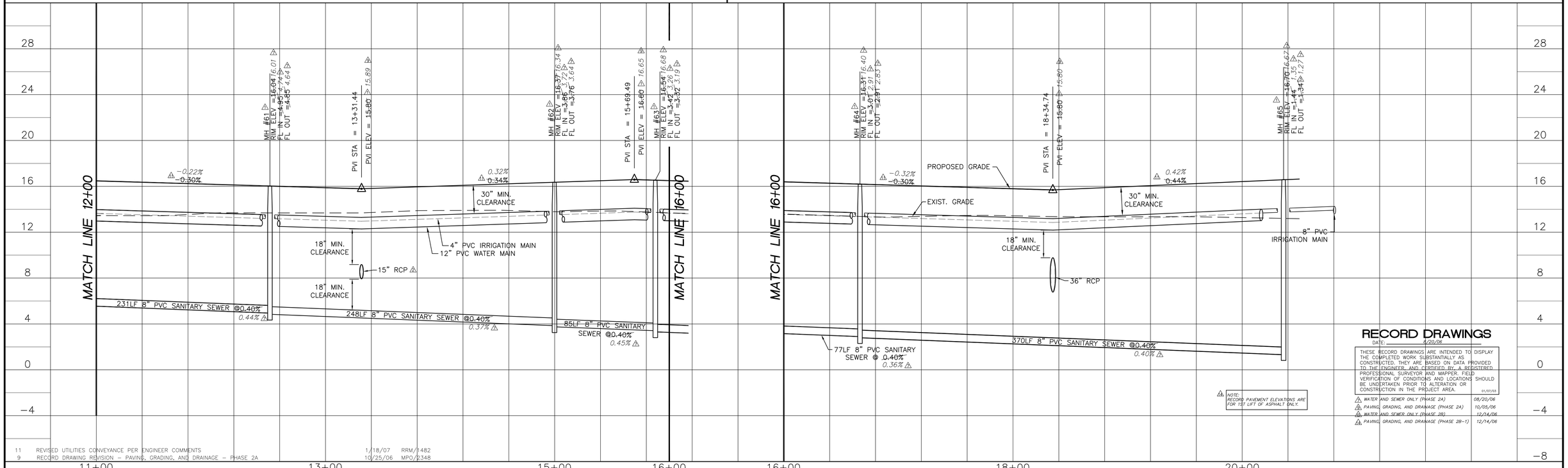

RECORD DRAWINGS

DATE: 4/20/06

THESE RECORD DRAWINGS ARE INTENDED TO DISPLAY THE COMPLETED WORK SUBSTANTIALLY AS CONSTRUCTED. THEY ARE BASED ON DATA PROVIDED TO THE ENGINEER, AND CERTIFIED BY, A REGISTERED PROFESSIONAL SURVEYOR AND MAPPER. FIELD VERIFICATION OF CONDITIONS AND LOCATIONS SHOULD BE UNDERTAKEN PRIOR TO ALTERATION OR CONSTRUCTION IN THE PROJECT AREA. 01/07/03

WATER AND SEWER ONLY (PHASE 2A)	08/20/06
PAVING, GRADING, AND DRAINAGE (PHASE 2A)	10/05/06
WATER AND SEWER ONLY (PHASE 2B)	12/14/06
PAVING, GRADING, AND DRAINAGE (PHASE 2B-1)	12/14/06

REV. NO.	REVISION	DATE	DRAWN BY / EMP. NO.	CHECKED BY / EMP. NO.
11	REVISED UTILITIES CONVEYANCE PER ENGINEER COMMENTS	1/18/07	RRM/1482	
9	RECORD DRAWING REVISION – PAVING, GRADING, AND DRAINAGE – PHASE 2A	10/25/06	MPO/2348	
7	RECORD DRAWING REVISION – WATER AND SEWER ONLY – PHASE 2A	8/14/06	MPO/2348	
4	REVISED FOR INSUBSTANTIAL CHANGE	5/4/06	RRM/1482	
3	REVISED PER FDEP COMMENTS AND PER ENGINEER	3/22/06	RRM/1482	
2	REVISED PER ENGINEER & COUNTY COMMENTS	11/29/05	RRM/1482	
1	REVISED PER COLLIER COUNTY COMMENTS	9/28/05	RRM/1482	

Feb 07, 2008 – 14:48:37 TDASILVA(X:\ENG\N0442\150-QuarryPhase2\Rev14-rcrdPaving&Drainage\044215018.dwg

ACTIVITY	INITIALS/EMP. NO.	DATE
DESIGNED BY:	LMG/894	4/15/04
DRAWN BY:	RRM/1482	4/15/05
CHECKED BY:		
CONTRACT ADMIN. BY:		
WM APPROVED BY:		

WilsonMiller
WilsonMiller, Inc. – FL Lic # LC-0000170
WilsonMiller, Inc. – Certificate of Authorization #43
Planners - Engineers - Ecologists - Surveyors - Landscape Architects - Transportation Consultants
WilsonMiller, Inc.
Naples - Fort Myers - Sarasota - Bradenton - Tampa - Tallahassee
4571 Colonial Boulevard, Suite 100 - Fort Myers, Florida 33912 - Phone 239-939-1020 - Fax 239-939-3412 - Web-Site www.wilsonmiller.com

CLIENT: CENTEX HOMES

PROJECT: THE QUARRY PHASE 2

DATE: FEB 2005
HORIZONTAL SCALE: 1" = 40'
VERTICAL SCALE: 1" = 4'
SEC: 14, 23 TWP: 48S RGE: 26E

TITLE: PLAN AND PROFILE
NICKEL RIDGE CIRCLE
STA. 11+00 TO END

CROSS REFERENCE FILE NO.: D-0442-48
PROJECT NUMBER: N0442-509-000

LISA M. GIORDANO
LICENSE # 59318

INDEX NUMBER: D-0442-150

SHEET NUMBER: 18 OF 38

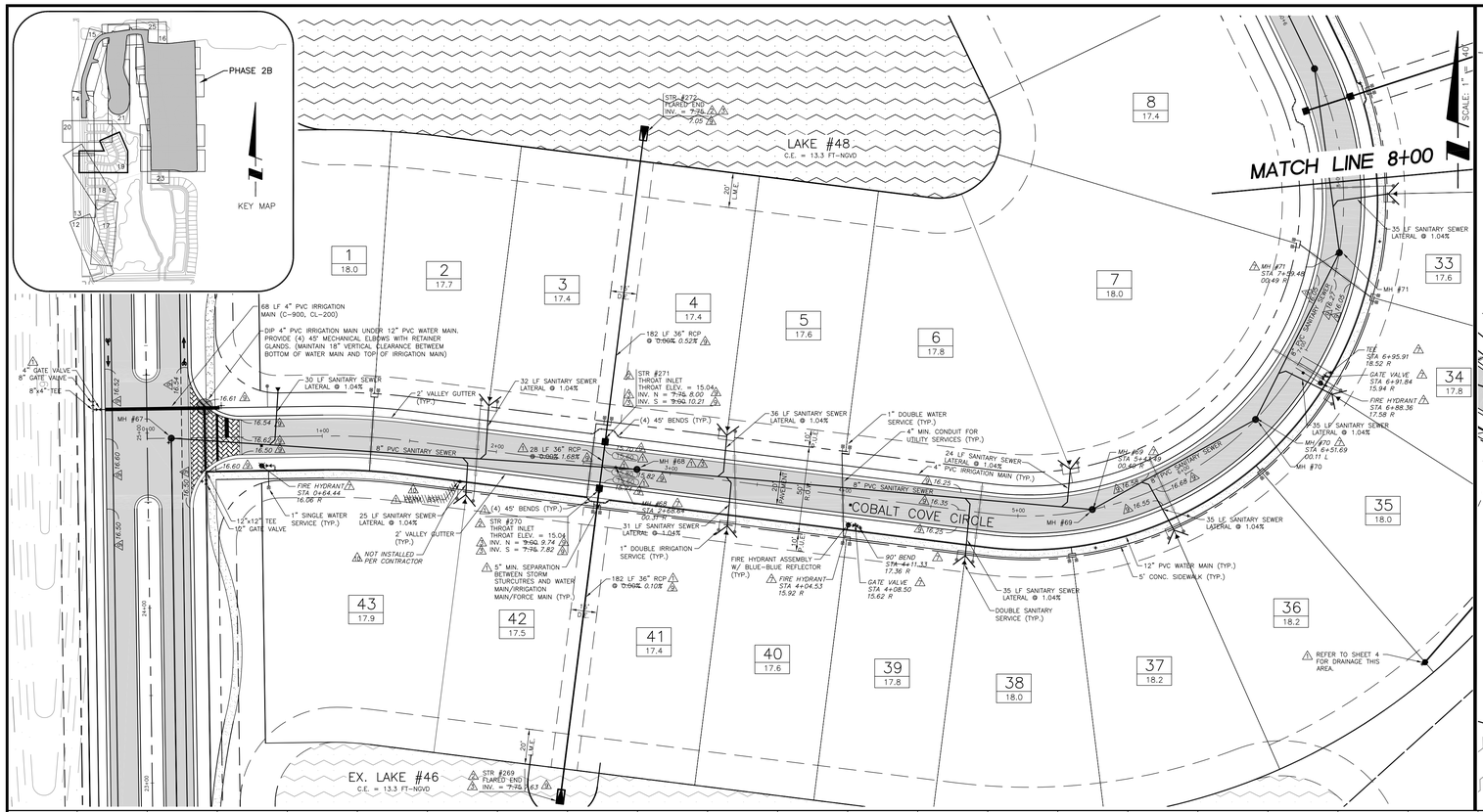

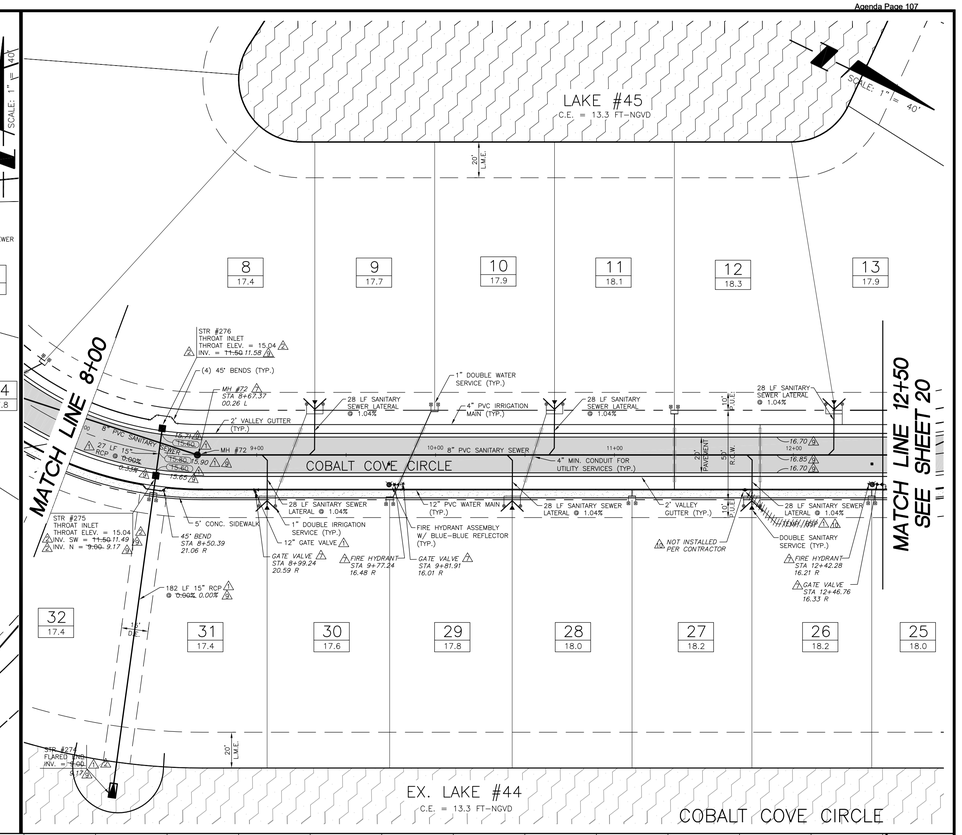

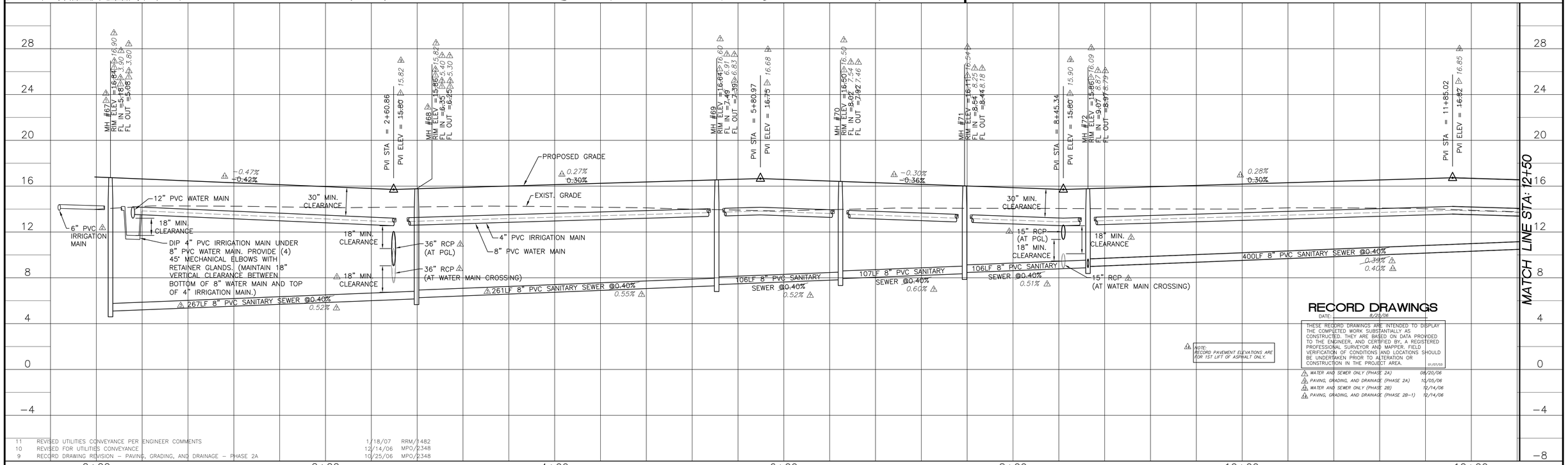

NOTE: RECORD PAVEMENT ELEVATIONS ARE FOR 1ST LIFT OF ASPHALT ONLY.

RECORD DRAWINGS

DATE: 8/29/06

THESE RECORD DRAWINGS ARE INTENDED TO DISPLAY THE COMPLETED WORK SUBSTANTIALLY AS CONSTRUCTED. THEY ARE BASED ON DATA PROVIDED TO THE ENGINEER, AND CERTIFIED BY, A REGISTERED PROFESSIONAL SURVEYOR AND MAPPER. FIELD VERIFICATION OF CONDITIONS AND LOCATIONS SHOULD BE UNDERTAKEN PRIOR TO ALTERATION OR CONSTRUCTION IN THE PROJECT AREA. 01/07/03

WATER AND SEWER ONLY (PHASE 2A) 08/22/06
PAVING, GRADING, AND DRAINAGE (PHASE 2A) 10/05/06
WATER AND SEWER ONLY (PHASE 2B) 12/14/06
PAVING, GRADING, AND DRAINAGE (PHASE 2B-1) 12/14/06

11	REVISED UTILITIES CONVEYANCE PER ENGINEER COMMENTS	1/18/07	RRM/1482
10	REVISED FOR UTILITIES CONVEYANCE	12/14/06	MPO/2348
9	RECORD DRAWING REVISION – PAVING, GRADING, AND DRAINAGE – PHASE 2A	10/25/06	MPO/2348
7	RECORD DRAWING REVISION – WATER AND SEWER ONLY – PHASE 2A	8/14/06	MPO/2348
4	REVISED FOR INSUBSTANTIAL CHANGE	5/4/06	RRM/1482
3	REVISED PER FDEP COMMENTS AND PER ENGINEER	3/22/06	RRM/1482
2	REVISED PER ENGINEER & COUNTY COMMENTS	11/29/05	RRM/1482
1	REVISED PER COLLIER COUNTY COMMENTS	9/28/05	RRM/1482
△REV	DATE	DRAWN BY / EMP. NO.	CHECKED BY / EMP. NO.

Feb 19, 2007 REVISION 4-29 RMARTENS(X:\ENG\N0442\150-Quarry Phase 2\Rev13 Rcrd Water and Sewer Phase 2B\044215019.dwg

ACTIVITY	INITIALS/EMP. NO.	DATE
DESIGNED BY:	LMG/894	4/15/05
DRAWN BY:	RRM/1482	4/15/05
CHECKED BY:		
CONTRACT ADMIN. BY:		
WM APPROVED BY:		

WilsonMiller
Planners - Engineers - Ecologists - Surveyors - Landscape Architects - Transportation Consultants
WilsonMiller, Inc.
Naples - Fort Myers - Sarasota - Bradenton - Tampa - Tallahassee
4571 Colonial Boulevard, Suite 100 - Fort Myers, Florida 33912 - Phone 239-939-1020 - Fax 239-939-3412 - Web-Site www.wilsonmiller.com
WilsonMiller, Inc. – FL Lic # LC-0000170
WilsonMiller, Inc. – Certificate of Authorization #43

CLIENT: CENTEX HOMES

PROJECT: THE QUARRY PHASE 2

DATE: FEB 2005
HORIZONTAL SCALE: 1" = 40'
VERTICAL SCALE: 1" = 4'
SEC: 14, 23 TWP: 48S RGE: 26E

TITLE: PLAN AND PROFILE
COBALT COVE CIRCLE
STA. 0+00 TO STA. 12+50

CROSS REFERENCE FILE NO.: D-0442-48
PROJECT NUMBER: N0442-509-000

LISA M. GIORDANO LICENSE # 59318
INDEX NUMBER: D-0442-150
SHEET NUMBER: 19 OF 38

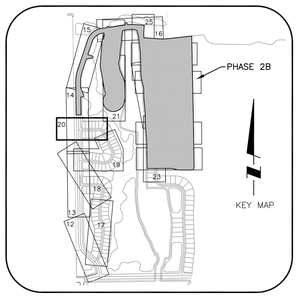

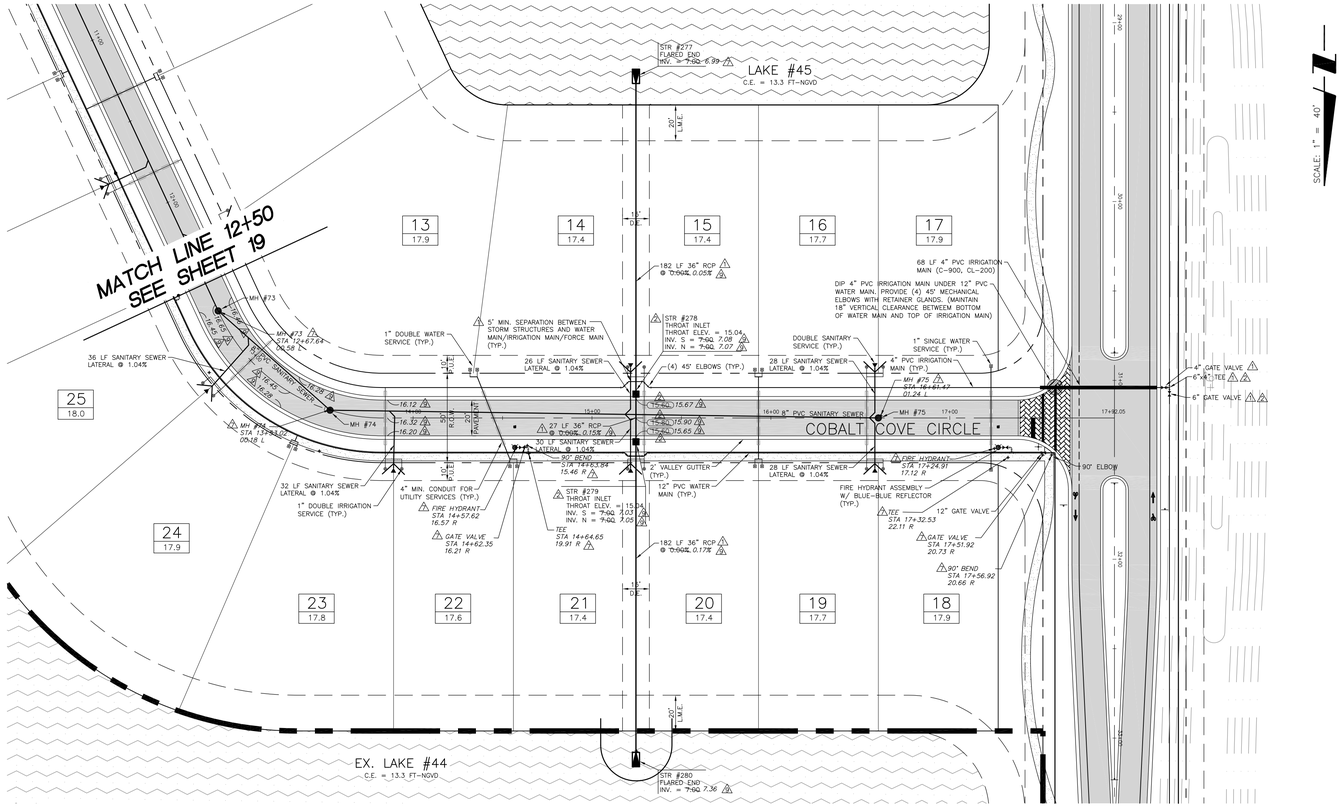

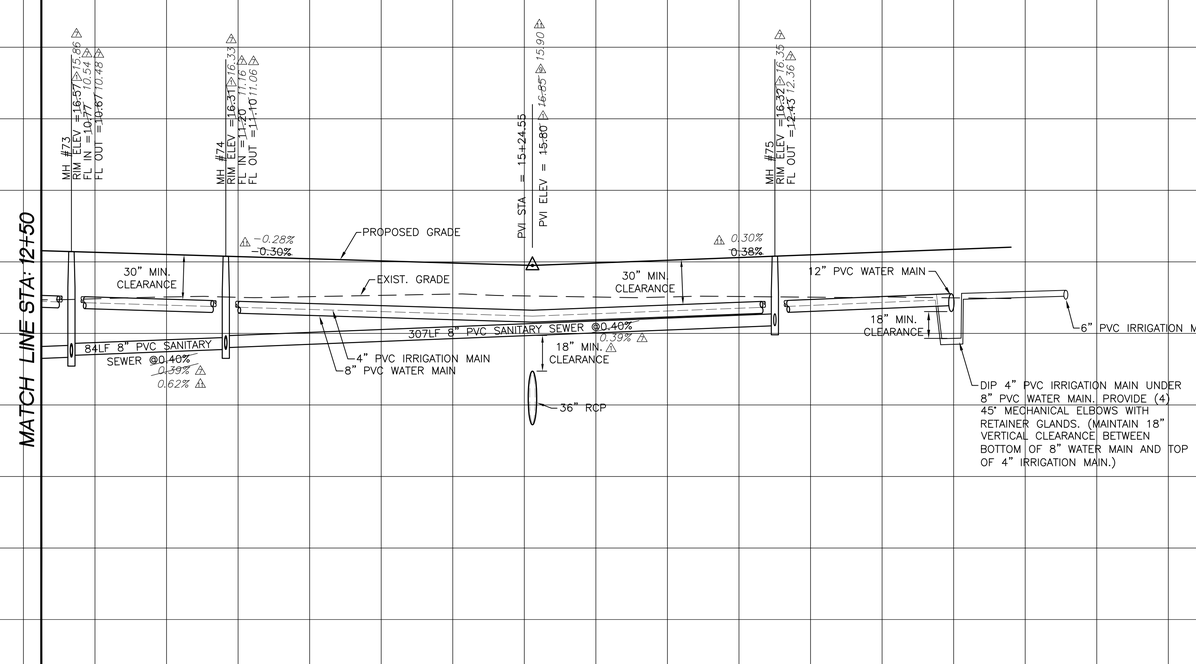

COBALT COVE CIRCLE

NOTE: RECORD PAVEMENT ELEVATIONS ARE FOR 1ST LIFT OF ASPHALT ONLY.

RECORD DRAWINGS
DATE: 8/20/06

THESE RECORD DRAWINGS ARE INTENDED TO DISPLAY THE COMPLETED WORK SUBSTANTIALLY AS CONSTRUCTED. THEY ARE BASED ON DATA PROVIDED TO THE ENGINEER, AND CERTIFIED BY, A REGISTERED PROFESSIONAL SURVEYOR AND MAPPER. FIELD VERIFICATION OF CONDITIONS AND LOCATIONS SHOULD BE UNDERTAKEN PRIOR TO ALTERATION OR CONSTRUCTION IN THE PROJECT AREA. 01/07/03

- WATER AND SEWER ONLY (PHASE 2A) 08/20/06
- PAVING, GRADING, AND DRAINAGE (PHASE 2A) 10/05/06
- WATER AND SEWER ONLY (PHASE 2B) 12/14/06
- PAVING, GRADING, AND DRAINAGE (PHASE 2B-1) 12/14/06

REV NO.	REVISION	DATE	DRAWN BY / EMP. NO.	CHECKED BY / EMP. NO.
11	REVISED UTILITIES CONVEYANCE PER ENGINEER COMMENTS	1/18/07	RRM/1482	
9	RECORD DRAWING REVISION – PAVING, GRADING, AND DRAINAGE – PHASE 2A	10/25/06	MPO/2348	
7	RECORD DRAWING REVISION – WATER AND SEWER ONLY	8/14/06	MPO/2348	
4	REVISED FOR INSUBSTANTIAL CHANGE	5/4/06	RRM/1482	
2	REVISED PER ENGINEER & COUNTY COMMENTS	11/29/05	RRM/1482	
1	REVISED PER COLLIER COUNTY COMMENTS	9/28/05	RRM/1482	

Feb 07, 2008 – 17:55:37 TDASILVAIX:\ENG\N0442\150-QuarryPhase2\Rev14-rcrdPaving&Drainage\044215020.dwg

ACTIVITY	INITIALS/EMP. NO.	DATE
DESIGNED BY:	LMG/894	4/15/05
DRAWN BY:	RRM/1482	4/15/05
CHECKED BY:		
CONTRACT ADMIN. BY:		
WM APPROVED BY:		

WilsonMiller
WilsonMiller, Inc. – FL LB # LC-C000170
WilsonMiller, Inc. – Certificate of Authorization #43
Planners - Engineers - Ecologists - Surveyors - Landscape Architects - Transportation Consultants
WilsonMiller, Inc.
Naples - Fort Myers - Sarasota - Bradenton - Tampa - Tallahassee
4571 Colonial Boulevard, Suite 100 - Fort Myers, Florida 33912 - Phone 239-939-1020 - Fax 239-939-3412 - Web-Site www.wilsonmiller.com

CLIENT: CENTEX HOMES
PROJECT: THE QUARRY PHASE 2

DATE: FEB 2005
HORIZONTAL SCALE: 1" = 40'
VERTICAL SCALE: 1" = 4'
SEC: 14, 23 TWP: 48S RGE: 26E
CROSS REFERENCE FILE NO.: D-0442-48

TITLE: PLAN AND PROFILE
COBALT COVE CIRCLE
STA. 12+50 TO END

PROJECT NUMBER: N0442-509-000

LISA M. GIORDANO
LICENSE # 59318
INDEX NUMBER: D-0442-150
SHEET NUMBER: 20 OF 38

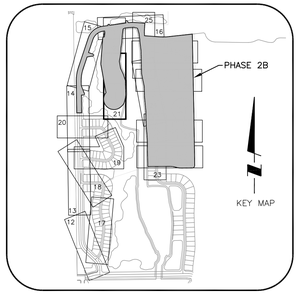

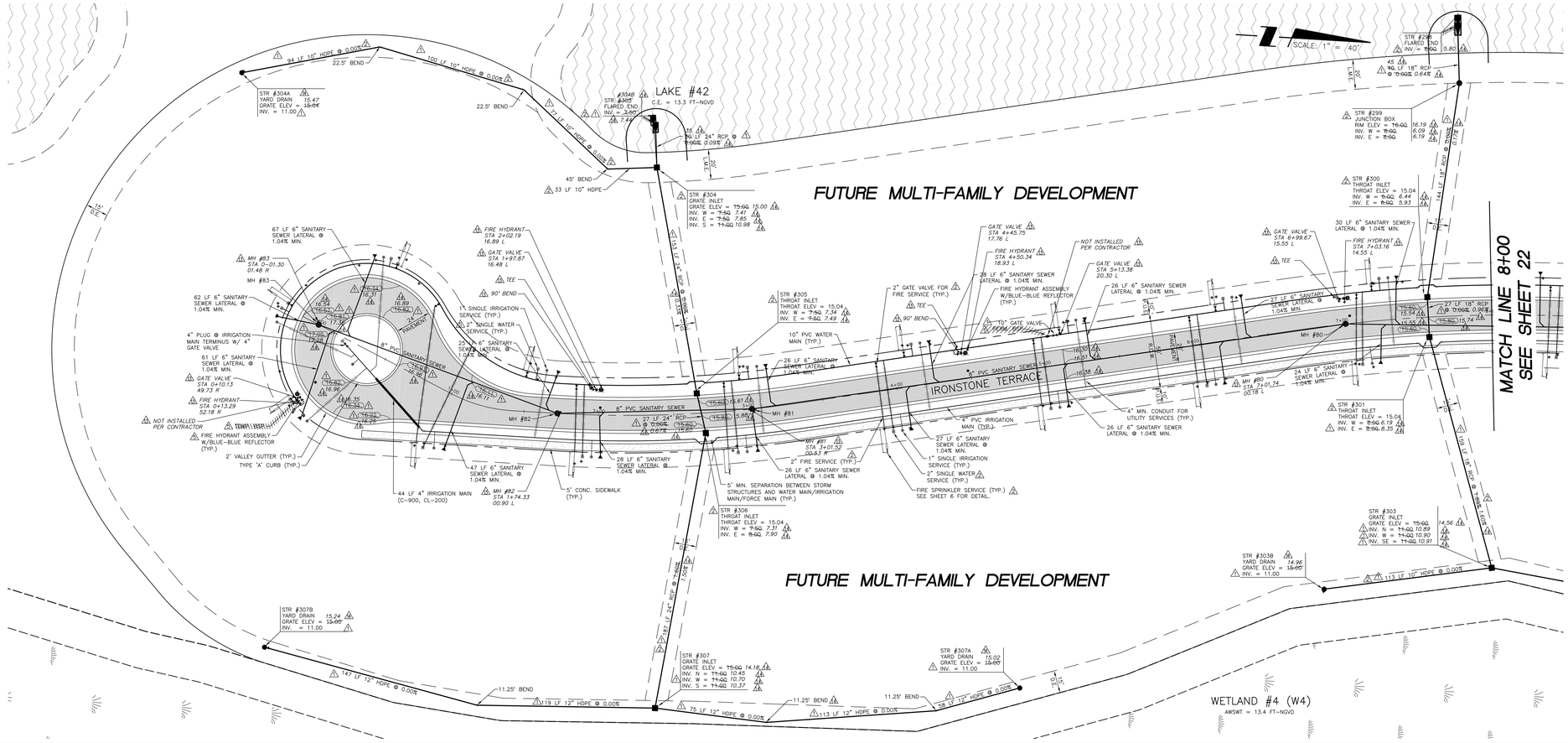

RECORD DRAWINGS

DATE: 8/20/06

THESE RECORD DRAWINGS ARE INTENDED TO DISPLAY THE COMPLETED WORK SUBSTANTIALLY AS CONSTRUCTED. THEY ARE BASED ON DATA PROVIDED TO THE ENGINEER, AND CERTIFIED BY, A REGISTERED PROFESSIONAL SURVEYOR AND MAPPER. FIELD VERIFICATION OF CONDITIONS AND LOCATIONS SHOULD BE UNDERTAKEN PRIOR TO ALTERATION OR CONSTRUCTION IN THE PROJECT AREA. 01/07/03

WATER AND SEWER ONLY (PHASE 2A)	08/20/06
PAVING, GRADING, AND DRAINAGE (PHASE 2A)	10/05/06
WATER AND SEWER ONLY (PHASE 2B)	12/14/06
PAVING, GRADING, AND DRAINAGE (PHASE 2B-1)	12/14/06

REV NO.	REVISION	DATE	DRAWN BY / EMP. NO.	CHECKED BY / EMP. NO.
14	RECORD DRAWING REVISION – PAVING, GRADING, AND DRAINAGE – PHASE 2B	12/14/06	MPO/2348	
13	RECORD DRAWING REVISION – WATER AND SEWER ONLY – PHASE 2B	12/14/06	MPO/2348	
10	REVISED FOR UTILITIES CONVEYANCE	12/14/06	MPO/2348	
5	REVISED PER ENGINEER & OWNER	6/3/06	RRM/1482	
2	REVISED PER ENGINEER & COUNTY COMMENTS	11/29/05	RRM/1482	
1	REVISED PER COLLIER COUNTY COMMENTS	9/28/05	RRM/1482	

Feb 19, 2008 – 13:55:51 TDASILVA(X:\ENG\N0442\150-QuarryPhase2\Rev14-rcrdPaving&Drainage\044215021.dwg

ACTIVITY	INITIALS/EMP. NO.	DATE
DESIGNED BY:	LMG/894	4/15/05
DRAWN BY:	RRM/1482	4/15/05
CHECKED BY:		
CONTRACT ADMIN. BY:		
WM APPROVED BY:		

WilsonMiller
Planners · Engineers · Ecologists · Surveyors · Landscape Architects · Transportation Consultants
WilsonMiller, Inc.
Naples · Fort Myers · Sarasota · Bradenton · Tampa · Tallahassee
4571 Colonial Boulevard, Suite 100 · Fort Myers, Florida 33912 · Phone 239-939-1020 · Fax 239-939-3412 · Web-Site www.wilsonmiller.com
WilsonMiller, Inc. – FL Lic# LC-0000170
WilsonMiller, Inc. – Certificate of Authorization #45

PROJECT: CENTEX HOMES
THE QUARRY
PHASE 2

DATE: FEB 2005
HORIZONTAL SCALE: 1" = 40'
VERTICAL SCALE: 1" = 4'
SEC: 14, TWP: 48S, RGE: 26E
CROSS REFERENCE FILE NO.: D-0442-48

TITLE: PLAN AND PROFILE
IRONSTONE TERRACE
STA. 0+00 TO STA. 8+00

PROJECT NUMBER: N0442-509-000

LISA M. GIORDANO
LICENSE # 59318

INDEX NUMBER: D-0442-150

SHEET NUMBER: 21 OF 38

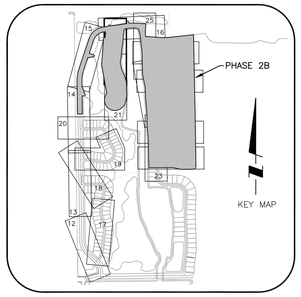

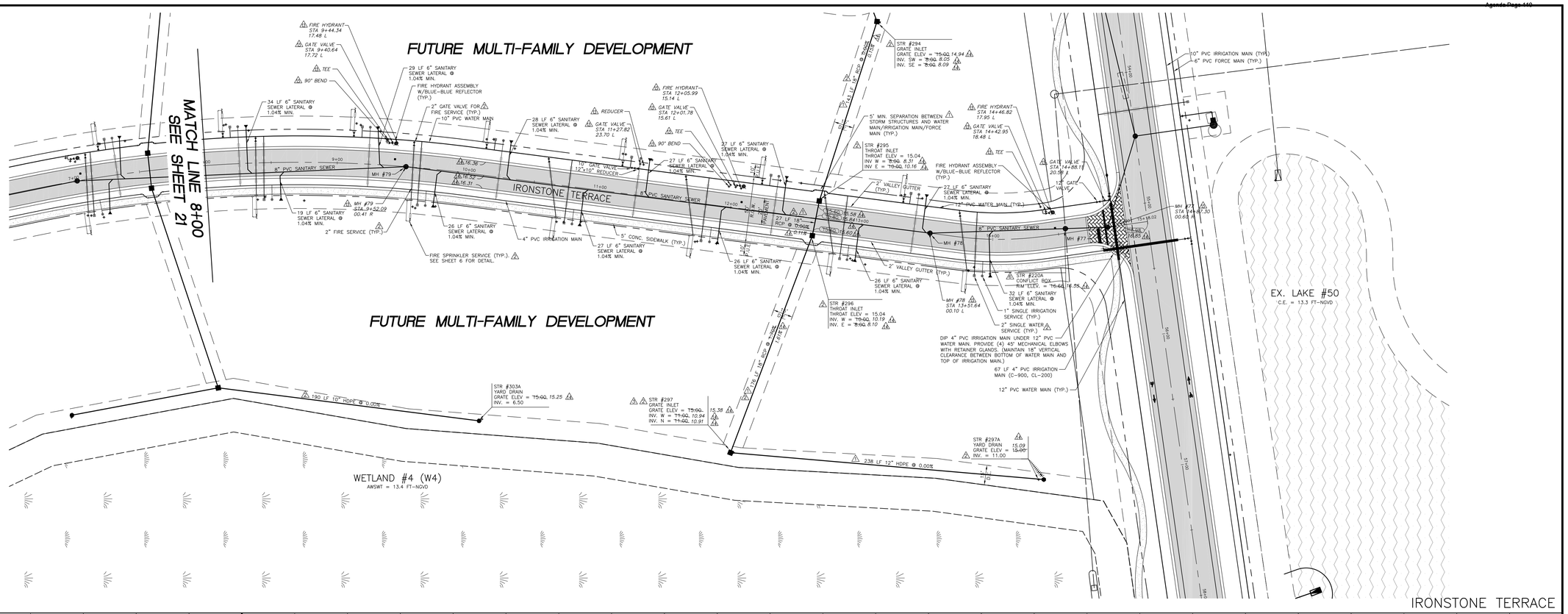

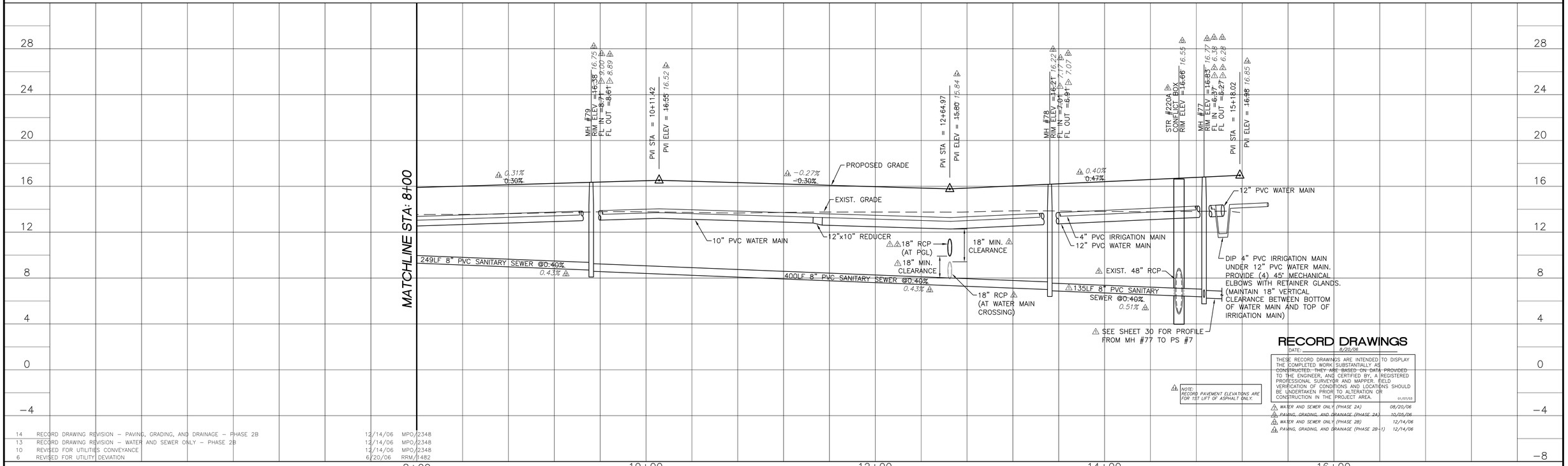

RECORD DRAWINGS

DATE: 8/20/06

THESE RECORD DRAWINGS ARE INTENDED TO DISPLAY THE COMPLETED WORK SUBSTANTIALLY AS CONSTRUCTED. THEY ARE BASED ON DATA PROVIDED TO THE ENGINEER, AND CERTIFIED BY, A REGISTERED PROFESSIONAL SURVEYOR AND MAPPER. FIELD VERIFICATION OF CONDITIONS AND LOCATIONS SHOULD BE UNDERTAKEN PRIOR TO ALTERATION OR CONSTRUCTION IN THE PROJECT AREA. 01/07/03

WATER AND SEWER ONLY (PHASE 2A)	08/20/06
PAVING, GRADING, AND DRAINAGE (PHASE 2A)	10/05/06
WATER AND SEWER ONLY (PHASE 2B)	12/14/06
PAVING, GRADING, AND DRAINAGE (PHASE 2B-1)	12/14/06

NOTE: RECORD PAVEMENT ELEVATIONS ARE FOR 1ST LIFT OF ASPHALT ONLY.

REV NO.	REVISION	DATE	DRAWN BY / EMP. NO.	CHECKED BY / EMP. NO.
14	RECORD DRAWING REVISION – PAVING, GRADING, AND DRAINAGE – PHASE 2B	12/14/06	MPO/2348	
13	RECORD DRAWING REVISION – WATER AND SEWER ONLY – PHASE 2B	12/14/06	MPO/2348	
10	REVISED FOR UTILITIES CONVEYANCE	12/14/06	MPO/2348	
6	REVISED FOR UTILITY DEVIATION	6/20/06	RRM/1482	
5	REVISED PER ENGINEER & OWNER	6/3/06	RRM/1482	
4	REVISED FOR INSUBSTANTIAL CHANGE	5/4/06	RRM/1482	
3	REVISED PER FDEP COMMENTS AND PER ENGINEER	3/22/06	RRM/1482	
2	REVISED PER ENGINEER & COUNTY COMMENTS	11/29/05	RRM/1482	
1	REVISED PER COLLIER COUNTY COMMENTS	9/28/05	RRM/1482	

Feb 19, 2008 – 14:04:35 TDASILVA(X:\ENG\N0442\150-QuarryPhase2\Rev14-rcrdPaving&Drainage\04421502 2.dwg

ACTIVITY	INITIALS/EMP. NO.	DATE
DESIGNED BY:	LMG/894	4/15/05
DRAWN BY:	RRM/1482	4/15/05
CHECKED BY:		
CONTRACT ADMIN. BY:		
WM APPROVED BY:		

WilsonMiller
Planners - Engineers - Ecologists - Surveyors - Landscape Architects - Transportation Consultants
WilsonMiller, Inc.
Naples - Fort Myers - Sarasota - Bradenton - Tampa - Tallahassee
4571 Colonial Boulevard, Suite 100 - Fort Myers, Florida 33912 - Phone 239-939-1020 - Fax 239-939-3412 - Web-Site www.wilsonmiller.com
WilsonMiller, Inc. – FL Lic # LC-0000170
WilsonMiller, Inc. – Certificate of Authorization #43

CLIENT: CENTEX HOMES

PROJECT: THE QUARRY PHASE 2

DATE: FEB 2004
HORIZONTAL SCALE: 1" = 40'
VERTICAL SCALE: 1" = 4'
SEC: 14, 23 TWP: 48S RGE: 26E
CROSS REFERENCE FILE NO.: D-0442-48

TITLE: PLAN AND PROFILE
IRONSTONE TERRACE
STA: 8+00 TO END

PROJECT NUMBER: N0442-509-000

LISA M. GIORDANO
LICENSE # 59318

INDEX NUMBER: D-0442-150

SHEET NUMBER: 22 OF 38

REV NO.	REVISION	DATE	DRAWN BY / EMP. NO.	CHECKED BY / EMP. NO.
14	RECORD DRAWING REVISION – PAVING, GRADING, AND DRAINAGE – PHASE 2B	12/14/06	MPO/2348	
13	RECORD DRAWING REVISION – WATER AND SEWER ONLY – PHASE 2B	12/14/06	MPO/2348	
10	REVISED FOR UTILITIES CONVEYANCE	12/14/06	MPO/2348	
4	REVISED FOR INSUBSTANTIAL CHANGE	5/4/06	RRM/1482	
3	REVISED PER FDEP COMMENTS AND PER ENGINEER	3/22/06	RRM/1482	
2	REVISED PER ENGINEER & COUNTY COMMENTS	11/29/05	RRM/1482	
1	REVISED PER COLLIER COUNTY COMMENTS	9/29/05	RRM/1482	

Feb 19, 2008 – 14:27:04 TDASILVA|X:\ENG\N0442\150-QuarryPhase2\Rev14-rcrdPaving&Drainage\044215023.dwg

ACTIVITY	INITIALS/EMP. NO.	DATE
DESIGNED BY:	LMG/894	4/15/05
DRAWN BY:	RRM/1482	4/15/05
CHECKED BY:		
CONTRACT ADMIN. BY:		
WM APPROVED BY:		

WilsonMiller

WilsonMiller, Inc. – FL Lic.# LC-C000170
WilsonMiller, Inc. – Certificate of Authorization #43

Planners • Engineers • Ecologists • Surveyors • Landscape Architects • Transportation Consultants
WilsonMiller, Inc.
Naples • Fort Myers • Sarasota • Bradenton • Tampa • Tallahassee
4571 Colonial Boulevard, Suite 100 • Fort Myers, Florida 33912 • Phone 239-939-1020 • Fax 239-939-3412 • Web-Site www.wilsonmiller.com

CLIENT: CENTEX HOMES

PROJECT: THE QUARRY PHASE 2

DATE: FEB 2005
HORIZONTAL SCALE: 1" = 40'
VERTICAL SCALE: 1" = 4'
SEC: 14, 23 TWP: 48S RGE: 26E

TITLE: PLAN AND PROFILE
MARBLE STONE DRIVE
STA. 26+16.85 TO STA. 36+00

CROSS REFERENCE FILE NO.: D-0442-48
PROJECT NUMBER: N0442-509-000

LISA M. GIORDANO
LICENSE # 59318

INDEX NUMBER: D-0442-150
SHEET NUMBER: 23 OF 38

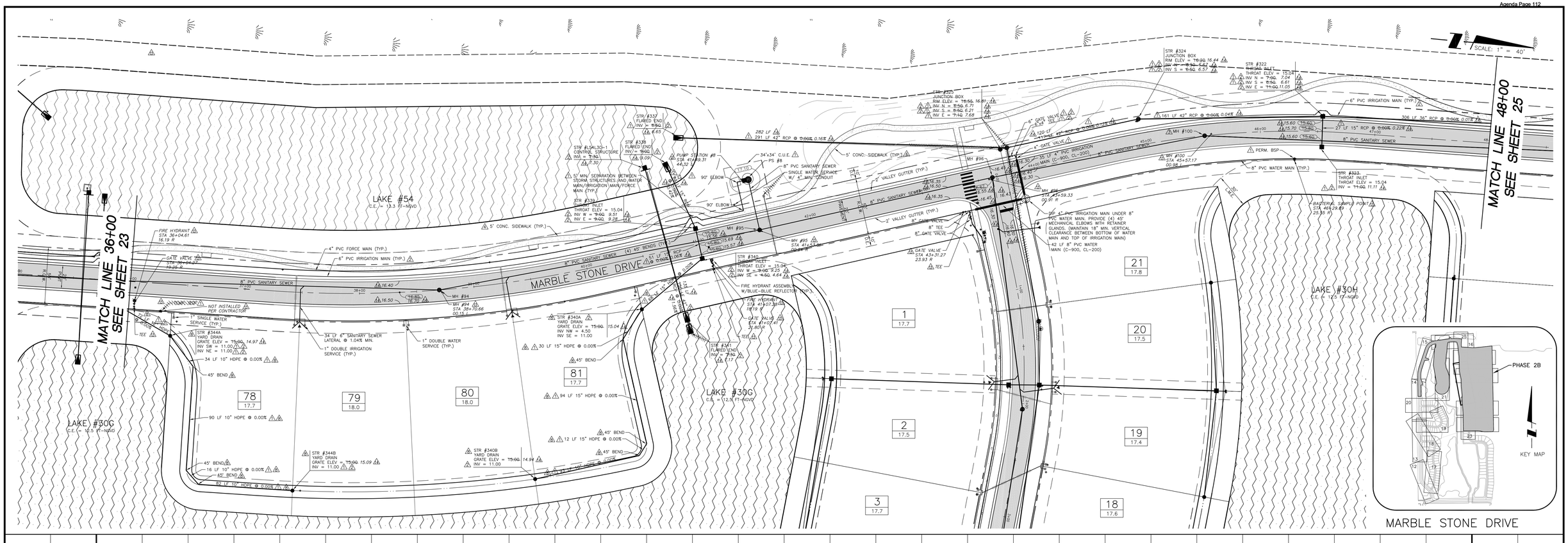

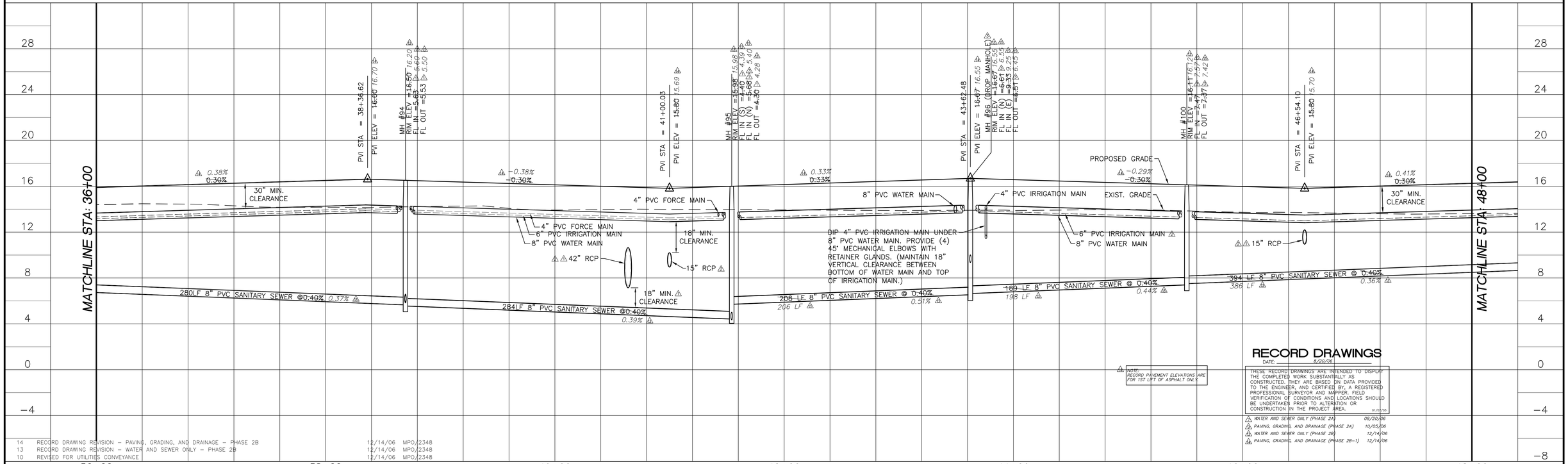

NOTE:
RECORD PAVEMENT ELEVATIONS ARE FOR 1ST LIFT OF ASPHALT ONLY.

RECORD DRAWINGS

DATE: 8/20/06

THESE RECORD DRAWINGS ARE INTENDED TO DISPLAY THE COMPLETED WORK SUBSTANTIALLY AS CONSTRUCTED. THEY ARE BASED ON DATA PROVIDED TO THE ENGINEER, AND CERTIFIED BY, A REGISTERED PROFESSIONAL SURVEYOR AND MAPPER. FIELD VERIFICATION OF CONDITIONS AND LOCATIONS SHOULD BE UNDERTAKEN PRIOR TO ALTERATION OR CONSTRUCTION IN THE PROJECT AREA. 01/03/03

1	WATER AND SEWER ONLY (PHASE 2A)	08/20/06
2	PAVING, GRADING, AND DRAINAGE (PHASE 2A)	10/05/06
3	WATER AND SEWER ONLY (PHASE 2B)	12/14/06
4	PAVING, GRADING, AND DRAINAGE (PHASE 2B-1)	12/14/06

REV NO.	REVISION	DATE	DRAWN BY / EMP. NO.	CHECKED BY / EMP. NO.
14	RECORD DRAWING REVISION – PAVING, GRADING, AND DRAINAGE – PHASE 2B	12/14/06	MPO/2348	
13	RECORD DRAWING REVISION – WATER AND SEWER ONLY – PHASE 2B	12/14/06	MPO/2348	
10	REVISED FOR UTILITIES CONVEYANCE	12/14/06	MPO/2348	
8	REVISED STORM DRAINS PER CLIENT AND ENGINEER	10/5/06	RRM/1482	
4	REVISED FOR INSUBSTANTIAL CHANGE	5/4/06	RRM/1482	
3	REVISED PER FDEP COMMENTS AND PER ENGINEER	3/22/06	RRM/1482	
2	REVISED PER ENGINEER & COUNTY COMMENTS	11/29/05	RRM/1482	
1	REVISED PER COLLIER COUNTY COMMENTS	9/29/05	RRM/1482	

Feb 26, 2008 – 15:31:07 TDASILVA(K:\ENG\N0442\150-QuarryPhase2\Rev14-rcrdPaving&Drainage\04421502 4.dwg

ACTIVITY	INITIALS/EMP. NO.	DATE
DESIGNED BY:	LMG/894	4/15/05
DRAWN BY:	RRM/1482	4/15/05
CHECKED BY:		
CONTRACT ADMIN. BY:		
WM APPROVED BY:		

WilsonMiller
Planners - Engineers - Ecologists - Surveyors - Landscape Architects - Transportation Consultants
WilsonMiller, Inc.
Naples - Fort Myers - Sarasota - Bradenton - Tampa - Tallahassee
4571 Colonial Boulevard, Suite 100 - Fort Myers, Florida 33912 - Phone 239-939-1020 - Fax 239-939-3412 - Web-Site www.wilsonmiller.com
WilsonMiller, Inc. – FL Lic # LC-0000170
WilsonMiller, Inc. – Certificate of Authorization #43

CLIENT: CENTEX HOMES

PROJECT: THE QUARRY PHASE 2

DATE: FEB 2005
HORIZONTAL SCALE: 1" = 40'
VERTICAL SCALE: 1" = 4'
SEC: 14, 23 TWP: 48S RGE: 26E

TITLE: PLAN AND PROFILE
MARBLE STONE DRIVE
STA. 36+00 TO STA. 48+00

CROSS REFERENCE FILE NO.: D-0442-48
PROJECT NUMBER: N0442-509-000

LISA M. GIORDANO
LICENSE # 59318

INDEX NUMBER: D-0442-150

SHEET NUMBER: 24 OF 38

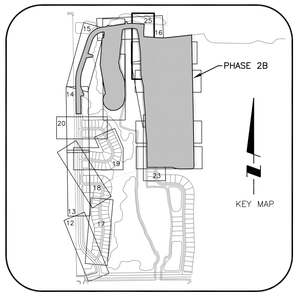

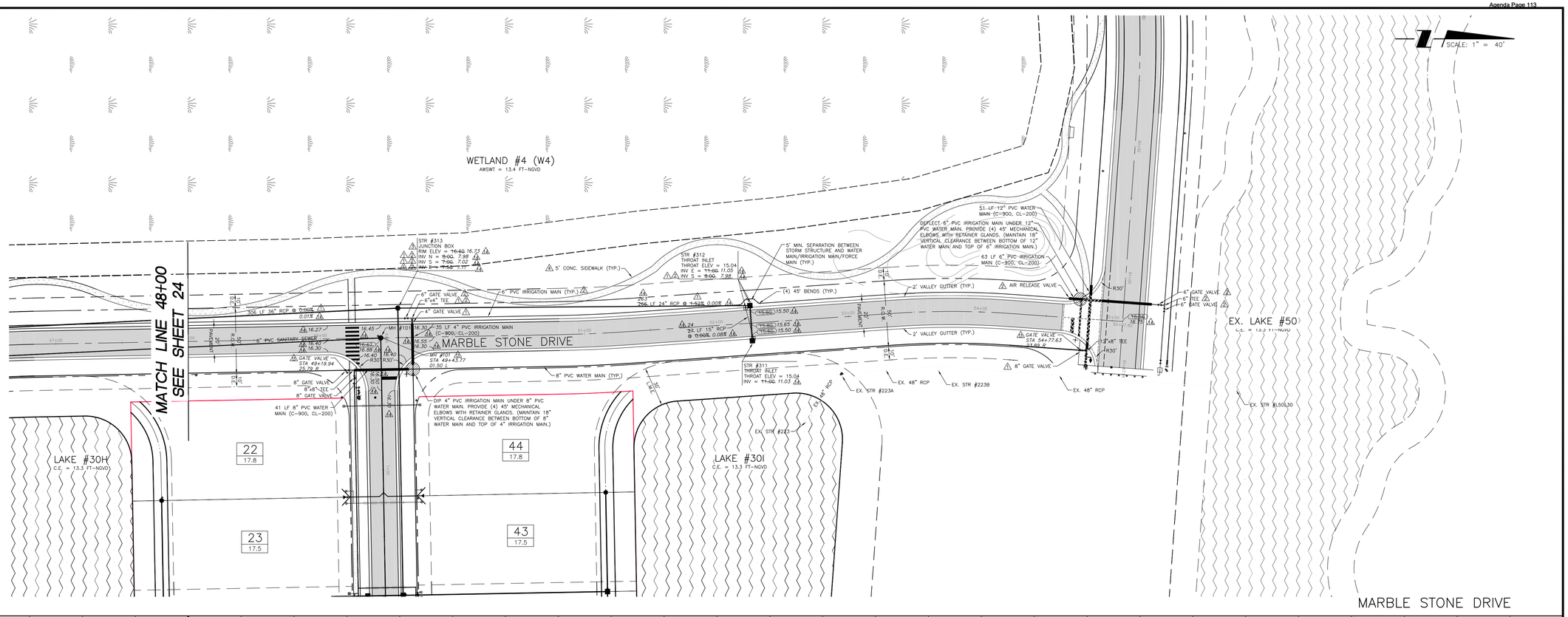

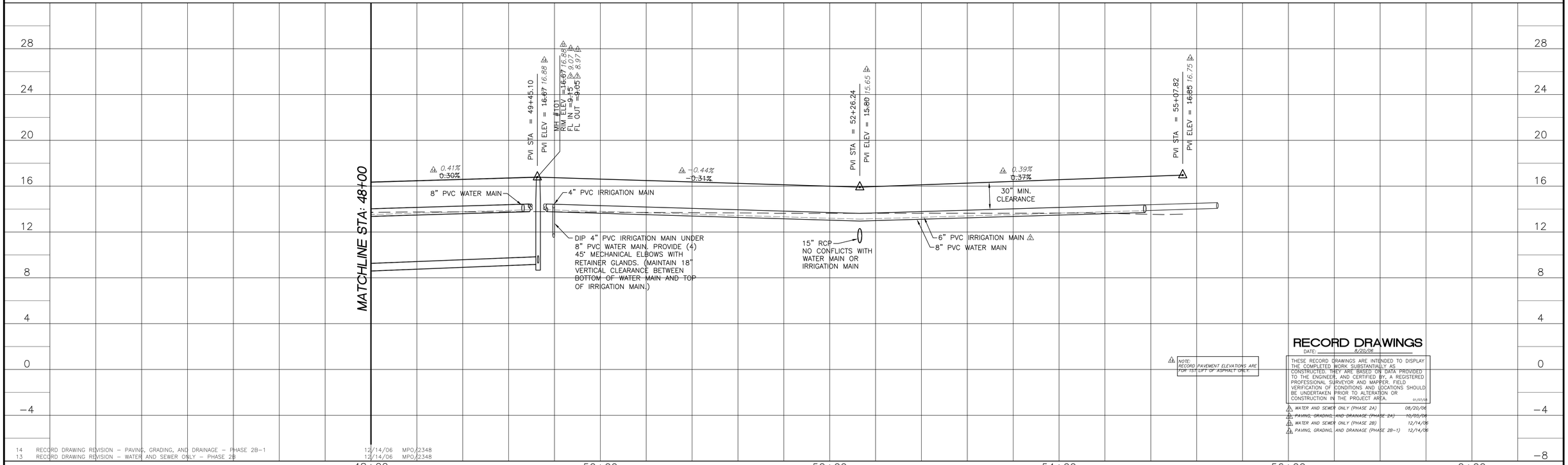

NOTE:
RECORD PAVEMENT ELEVATIONS ARE FOR 1ST LIFT OF ASPHALT ONLY.

RECORD DRAWINGS

DATE: 8/20/06

THESE RECORD DRAWINGS ARE INTENDED TO DISPLAY THE COMPLETED WORK SUBSTANTIALLY AS CONSTRUCTED. THEY ARE BASED ON DATA PROVIDED TO THE ENGINEER, AND CERTIFIED BY, A REGISTERED PROFESSIONAL SURVEYOR AND MAPPER. FIELD VERIFICATION OF CONDITIONS AND LOCATIONS SHOULD BE UNDERTAKEN PRIOR TO ALTERATION OR CONSTRUCTION IN THE PROJECT AREA. 01/07/08

1	WATER AND SEWER ONLY (PHASE 2A)	08/20/06
2	PAVING, GRADING, AND DRAINAGE (PHASE 2A)	10/05/06
3	WATER AND SEWER ONLY (PHASE 2B)	12/14/06
4	PAVING, GRADING, AND DRAINAGE (PHASE 2B-1)	12/14/06

REV NO.	REVISION	DATE	DRAWN BY / EMP. NO.	CHECKED BY / EMP. NO.
14	RECORD DRAWING REVISION – PAVING, GRADING, AND DRAINAGE – PHASE 2B-1	12/14/06	MPO/2348	
13	RECORD DRAWING REVISION – WATER AND SEWER ONLY – PHASE 2B	12/14/06	MPO/2348	
10	REVISED FOR UTILITIES CONVEYANCE	12/14/06	MPO/2348	
4	REVISED FOR INSUBSTANTIAL CHANGE	5/4/06	RRM/1482	
3	REVISED PER FDEP COMMENTS AND PER ENGINEER	3/22/06	RRM/1482	
2	REVISED PER ENGINEER & COUNTY COMMENTS	11/29/05	RRM/1482	
1	REVISED PER COLLIER COUNTY COMMENTS	9/29/05	RRM/1482	

REVISION Feb 07, 2008 – 16:25:22 T:\DASILVA\X:\ENG\N0442\150-QuarryPhase2\Rev14-rcrdPaving&Drainage\04215025.dwg

ACTIVITY	INITIALS/EMP. NO.	DATE
DESIGNED BY:	LMG/894	4/15/05
DRAWN BY:	RRM/1482	4/15/05
CHECKED BY:		
CONTRACT ADMIN. BY:		
WM APPROVED BY:		

WilsonMiller
Planners - Engineers - Ecologists - Surveyors - Landscape Architects - Transportation Consultants
WilsonMiller, Inc.
Naples - Fort Myers - Sarasota - Bradenton - Tampa - Tallahassee
4571 Colonial Boulevard, Suite 100 - Fort Myers, Florida 33912 - Phone 239-939-1020 - Fax 239-939-3412 - Web-Site www.wilsonmiller.com
WilsonMiller, Inc. – FL Lic # LC-0000170
WilsonMiller, Inc. – Certificate of Authorization #43

CLIENT: CENTEX HOMES

PROJECT: THE QUARRY PHASE 2

DATE: FEB 2005
HORIZONTAL SCALE: 1" = 40'
VERTICAL SCALE: 1" = 4'
SEC: 14, 23 TWP: 48S RGE: 26E
CROSS REFERENCE FILE NO.: D-0442-48

TITLE: PLAN AND PROFILE
MARBLE STONE DRIVE
48+00 TO END

PROJECT NUMBER: N0442-509-000

LISA M. GIORDANO
LICENSE # 59318

INDEX NUMBER: D-0442-150

SHEET NUMBER: 25 OF 38

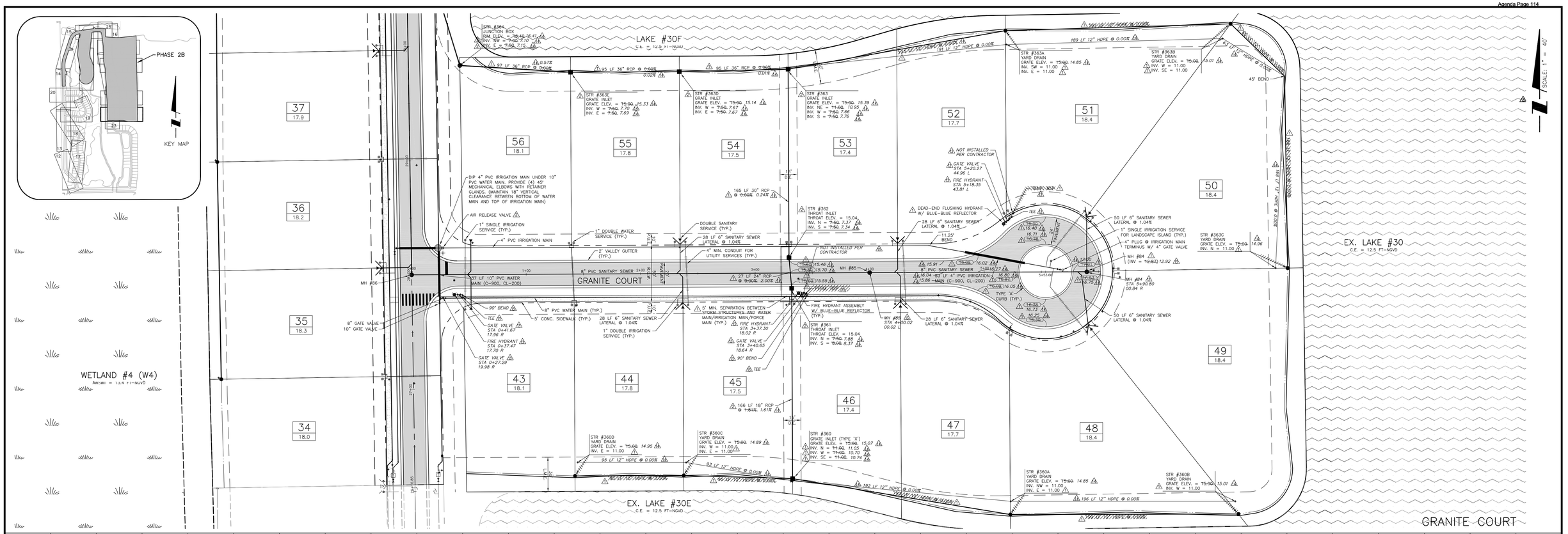

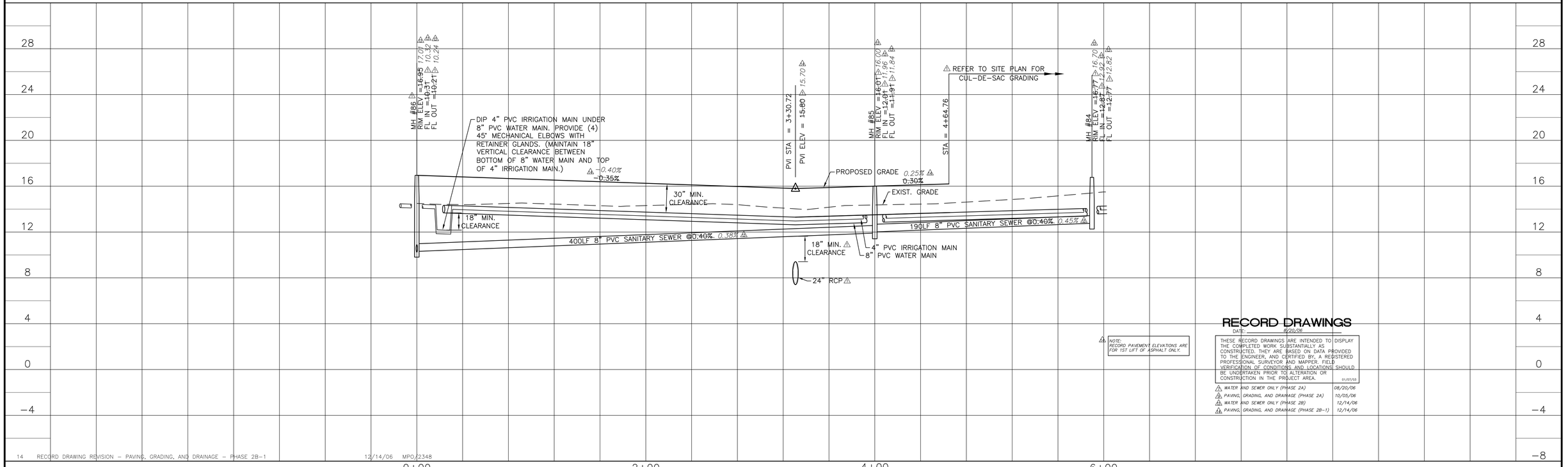

NOTE: RECORD PAVEMENT ELEVATIONS ARE FOR 1ST LIFT OF ASPHALT ONLY.

RECORD DRAWINGS

DATE: 8/20/08

THESE RECORD DRAWINGS ARE INTENDED TO DISPLAY THE COMPLETED WORK SUBSTANTIALLY AS CONSTRUCTED. THEY ARE BASED ON DATA PROVIDED TO THE ENGINEER, AND CERTIFIED BY, A REGISTERED PROFESSIONAL SURVEYOR AND MAPPER. FIELD VERIFICATION OF CONDITIONS AND LOCATIONS SHOULD BE UNDERTAKEN PRIOR TO ALTERATION OR CONSTRUCTION IN THE PROJECT AREA. 01/01/03

1	WATER AND SEWER ONLY (PHASE 2A)	08/20/06
2	PAVING, GRADING, AND DRAINAGE (PHASE 2A)	10/05/06
3	WATER AND SEWER ONLY (PHASE 2B)	12/14/06
4	PAVING, GRADING, AND DRAINAGE (PHASE 2B-1)	12/14/06

REV NO.	REVISION	DATE	DRAWN BY / EMP. NO.	CHECKED BY / EMP. NO.
14	RECORD DRAWING REVISION – PAVING, GRADING, AND DRAINAGE – PHASE 2B-1	12/14/06	MPO/2348	
13	RECORD DRAWING REVISION – WATER AND SEWER ONLY – PHASE 2B	12/14/06	MPO/2348	
10	REVISED FOR UTILITIES CONVEYANCE	12/14/06	MPO/2348	
4	REVISED FOR INSUBSTANTIAL CHANGE	5/4/06	RRM/1482	
2	REVISED PER ENGINEER & COUNTY COMMENTS	11/29/05	RRM/1482	
1	REVISED PER COLLIER COUNTY COMMENTS	9/28/05	RRM/1482	

Feb 19, 2008 – 14:44:05 TDASILVA(K:\ENG\N0442\150-QuarryPhase2\Rev14-rcrdPaving&Drainage\044215026.dwg

ACTIVITY	INITIALS/EMP. NO.	DATE
DESIGNED BY:	LMG/894	4/15/05
DRAWN BY:	RRM/1482	4/15/05
CHECKED BY:		
CONTRACT ADMIN. BY:		
WM APPROVED BY:		

WilsonMiller

Planners - Engineers - Ecologists - Surveyors - Landscape Architects - Transportation Consultants

WilsonMiller, Inc.

Naples - Fort Myers - Sarasota - Bradenton - Tampa - Tallahassee

4571 Colonial Boulevard, Suite 100 - Fort Myers, Florida 33912 - Phone 239-939-1020 - Fax 239-939-3412 - Web-Site www.wilsonmiller.com

WilsonMiller, Inc. – FL Lic # LC-0000170
WilsonMiller, Inc. – Certificate of Authorization #43

CLIENT: CENTEX HOMES

PROJECT: THE QUARRY PHASE 2

DATE: FEB 2005
HORIZONTAL SCALE: 1" = 40'
VERTICAL SCALE: 1" = 4'
SEC: 14, 23 TWP: 48S RGE: 26E

TITLE: PLAN AND PROFILE
GRANITE COURT
STA. 0+00 TO END

CROSS REFERENCE FILE NO.: D-0442-48
PROJECT NUMBER: N0442-509-000

LISA M. GIORDANO
LICENSE # 59318

INDEX NUMBER: D-0442-150

SHEET NUMBER: 26 OF 38

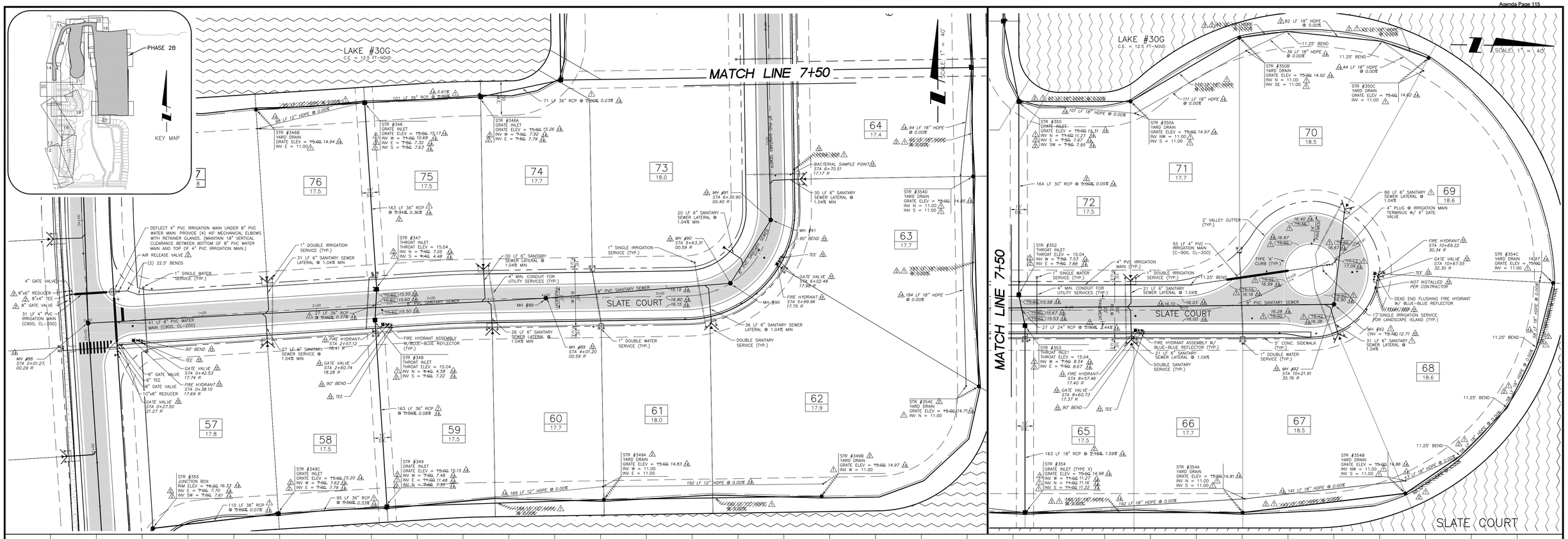

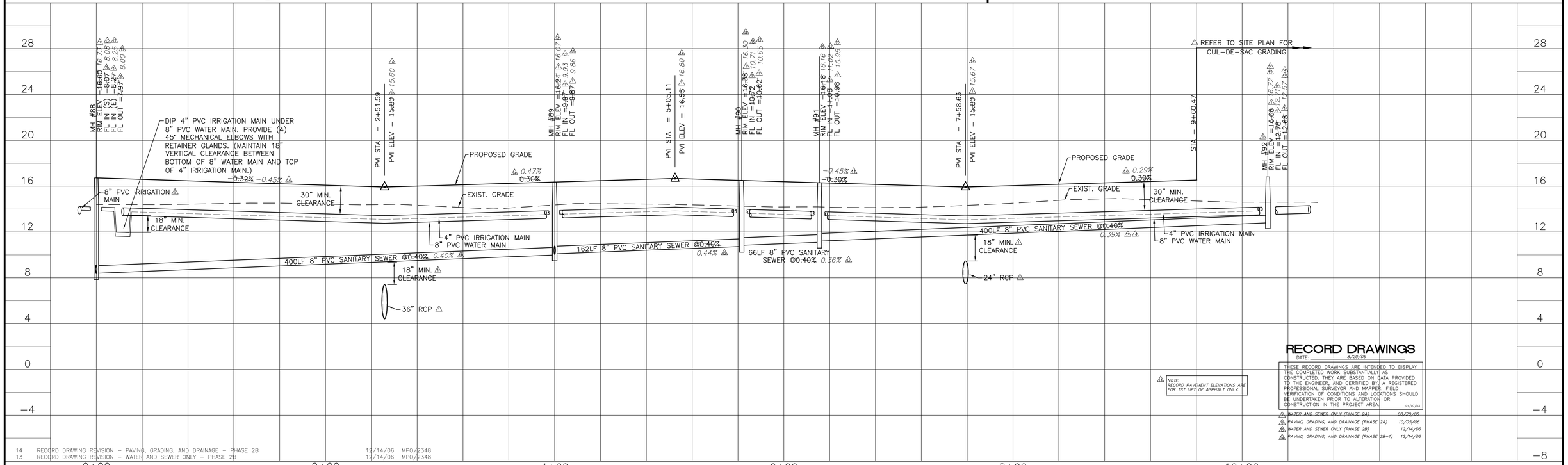

RECORD DRAWINGS
DATE: 8/20/06

THESE RECORD DRAWINGS ARE INTENDED TO DISPLAY THE COMPLETED WORK SUBSTANTIALLY AS CONSTRUCTED. THEY ARE BASED ON DATA PROVIDED TO THE ENGINEER, AND CERTIFIED BY A REGISTERED PROFESSIONAL SURVEYOR AND MAPPER. FIELD VERIFICATION OF CONDITIONS AND LOCATIONS SHOULD BE UNDERTAKEN PRIOR TO ALTERATION OR CONSTRUCTION IN THE PROJECT AREA. 01/07/03

1	WATER AND SEWER ONLY (PHASE 2A)	08/20/06
2	PAVING, GRADING, AND DRAINAGE (PHASE 2A)	10/05/06
3	WATER AND SEWER ONLY (PHASE 2B)	12/14/06
4	PAVING, GRADING, AND DRAINAGE (PHASE 2B-1)	12/14/06

△REV NO.	REVISION	DATE	DRAWN BY / EMP. NO.	CHECKED BY / EMP. NO.
14	RECORD DRAWING REVISION – PAVING, GRADING, AND DRAINAGE – PHASE 2B	12/14/06	MPO/2348	
13	RECORD DRAWING REVISION – WATER AND SEWER ONLY – PHASE 2B	12/14/06	MPO/2348	
10	REVISED FOR UTILITIES CONVEYANCE	12/14/06	MPO/2348	
4	REVISED FOR INSUBSTANTIAL CHANGE	5/4/06	RRM/1482	
3	REVISED PER FDEP COMMENTS AND PER ENGINEER	3/22/06	RRM/1482	
2	REVISED PER ENGINEER & COUNTY COMMENTS	11/29/05	RRM/1482	
1	REVISED PER COLLIER COUNTY COMMENTS	9/28/05	RRM/1482	

Mar 12, 2008 – 09:50:21 TDASILVA(X:\ENG\N0442\150-QuarryPhase2\Rev14-rcrdPaving&Drainage\04421502 7.dwg

ACTIVITY	INITIALS/EMP. NO.	DATE
DESIGNED BY:	LMG/894	4/15/05
DRAWN BY:	RRM/1482	4/15/05
CHECKED BY:		
CONTRACT ADMIN. BY:		
WM APPROVED BY:		

WilsonMiller
Planners - Engineers - Ecologists - Surveyors - Landscape Architects - Transportation Consultants
WilsonMiller, Inc.
Naples - Fort Myers - Sarasota - Bradenton - Tampa - Tallahassee
4571 Colonial Boulevard, Suite 100 - Fort Myers, Florida 33912 - Phone 239-939-1020 - Fax 239-939-3412 - Web-Site www.wilsonmiller.com
WilsonMiller, Inc. – FL Lic.# LC-0000170
WilsonMiller, Inc. – Certificate of Authorization #43

CLIENT: CENTEX HOMES
PROJECT: THE QUARRY PHASE 2

DATE: FEB 2005
HORIZONTAL SCALE: 1" = 40'
VERTICAL SCALE: 1" = 4'
SEC: 14, 23 TWP: 48S RGE: 26E

TITLE: PLAN AND PROFILE
SLATE COURT
STA. 0+00 TO END

CROSS REFERENCE FILE NO.: D-0442-48
PROJECT NUMBER: N0442-509-000

LISA M. GIORDANO
LICENSE # 59318

INDEX NUMBER: D-0442-150
SHEET NUMBER: 27 OF 38

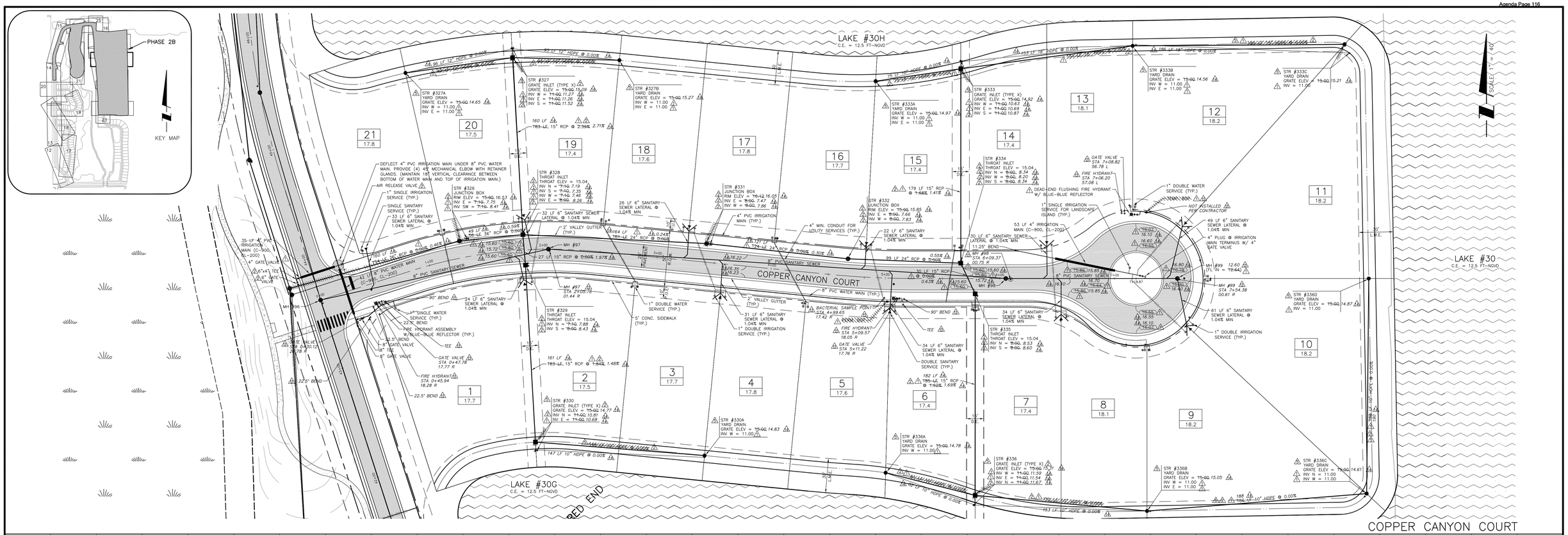

REV NO.	REVISION	DATE	DRAWN BY / EMP. NO.	CHECKED BY / EMP. NO.
14	RECORD DRAWING REVISION – PAVING, GRADING, AND DRAINAGE – PHASE 2B	12/14/06	MPO/2348	
13	RECORD DRAWING REVISION – WATER AND SEWER ONLY – PHASE 2B	12/14/06	MPO/2348	
10	REVISED FOR UTILITIES CONVEYANCE	12/14/06	MPO/2348	
5	REVISED PER ENGINEER & OWNER	6/3/06	RRM/1482	
4	REVISED FOR INSUBSTANTIAL CHANGE	5/4/06	RRM/1482	
2	REVISED PER ENGINEER & COUNTY COMMENTS	11/29/05	RRM/1482	
1	REVISED PER COLLIER COUNTY COMMENTS	9/29/05	RRM/1482	

Feb 07, 2008 – 15:40:04 TDASILVA(K:\ENG\N0442\150-QuarryPhase2\Rev14-rcrdPaving&Drainage\044215028.dwg

ACTIVITY	INITIALS/EMP. NO.	DATE
DESIGNED BY:	LMG/894	4/15/05
DRAWN BY:	RRM/1482	4/15/05
CHECKED BY:		
CONTRACT ADMIN. BY:		
WM APPROVED BY:		

WilsonMiller
Planners - Engineers - Ecologists - Surveyors - Landscape Architects - Transportation Consultants
WilsonMiller, Inc.
Naples - Fort Myers - Sarasota - Bradenton - Tampa - Tallahassee
4571 Colonial Boulevard, Suite 100 - Fort Myers, Florida 33912 - Phone 239-939-1020 - Fax 239-939-3412 - Web-Site www.wilsonmiller.com
WilsonMiller, Inc. – FL Lic # LC-0000170
WilsonMiller, Inc. – Certificate of Authorization #43

CLIENT: CENTEX HOMES
PROJECT: THE QUARRY PHASE 2

DATE: FEB 2005
HORIZONTAL SCALE: 1" = 40'
VERTICAL SCALE: 1" = 4'
SEC: 14, 23 TWP: 48S RGE: 26E
CROSS REFERENCE FILE NO.: D-0442-48

TITLE: PLAN AND PROFILE
COPPER CANYON COURT
STA. 0+00 TO END

PROJECT NUMBER: N0442-509-000

LISA M. GIORDANO LICENSE # 59318
INDEX NUMBER: D-0442-150
SHEET NUMBER: 28 OF 38

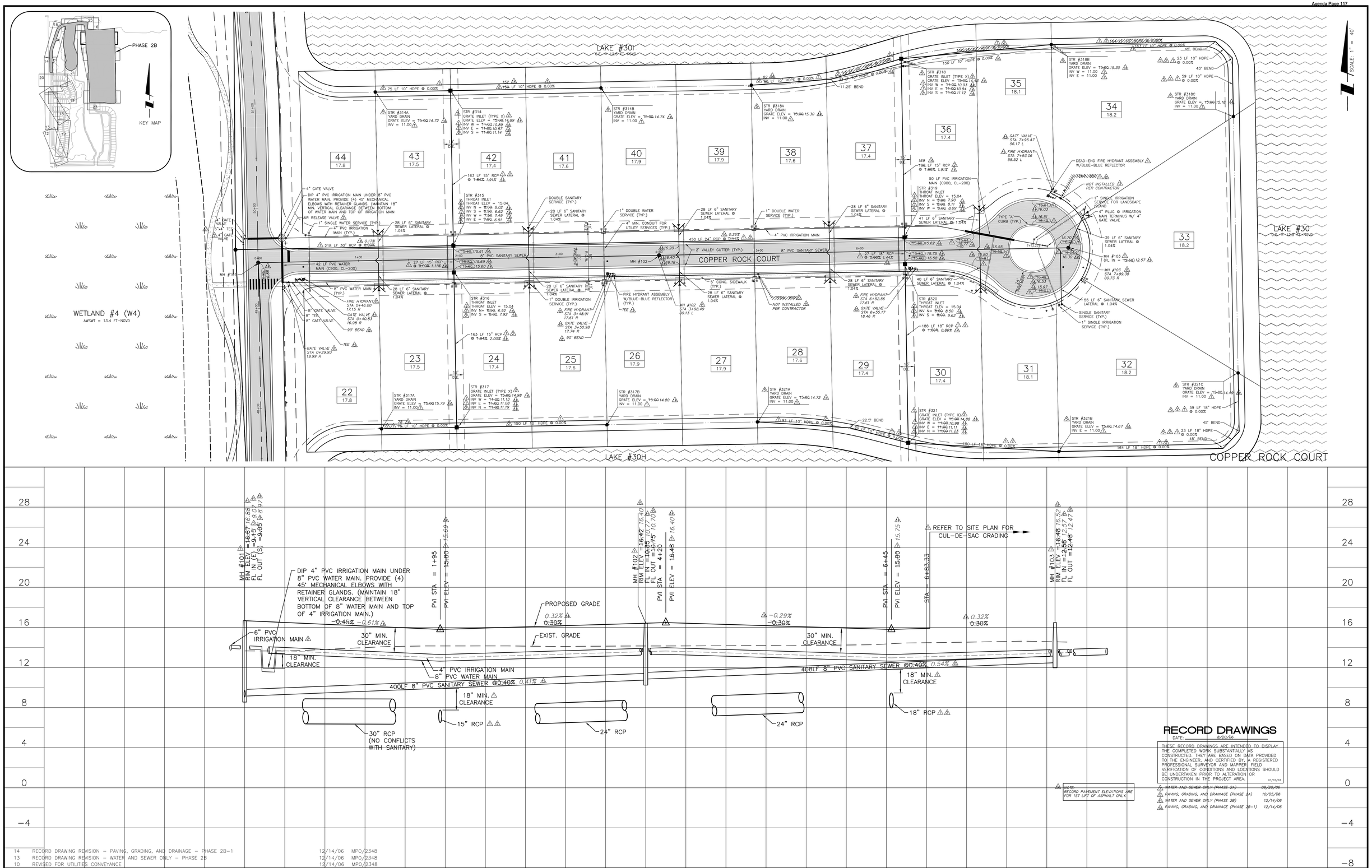

REV NO.	REVISION	DATE	DRAWN BY / EMP. NO.	CHECKED BY / EMP. NO.
14	RECORD DRAWING REVISION – PAVING, GRADING, AND DRAINAGE – PHASE 2B-1	12/14/06	MPO/2348	
13	RECORD DRAWING REVISION – WATER AND SEWER ONLY – PHASE 2B	12/14/06	MPO/2348	
10	REVISED FOR UTILITIES CONVEYANCE	12/14/06	MPO/2348	
5	REVISED PER ENGINEER & OWNER	6/3/06	RRM/1482	
4	REVISED FOR INSUBSTANTIAL CHANGE	5/4/06	RRM/1482	
3	REVISED PER FDEP COMMENTS AND PER ENGINEER	3/22/06	RRM/1482	
2	REVISED PER ENGINEER & COUNTY COMMENTS	11/29/05	RRM/1482	
1	REVISED PER COLLIER COUNTY COMMENTS	9/29/05	RRM/1482	

Feb 20, 2008 – 10:51:37 TDASILVA(X:\ENG\N0442\150-QuarryPhase2\Rev14-rcrdPaving&Drainage\044215029.dwg

ACTIVITY	INITIALS/EMP. NO.	DATE
DESIGNED BY:	LMG/894	4/15/05
DRAWN BY:	RRM/1482	4/15/05
CHECKED BY:		
CONTRACT ADMIN. BY:		
WM APPROVED BY:		

WilsonMiller, Inc. – FL Lic # LC-C000170
WilsonMiller, Inc. – Certificate of Authorization #43

WilsonMiller
Planners - Engineers - Ecologists - Surveyors - Landscape Architects - Transportation Consultants
WilsonMiller, Inc.
Naples - Fort Myers - Sarasota - Bradenton - Tampa - Tallahassee
4571 Colonial Boulevard, Suite 100 - Fort Myers, Florida 33912 - Phone 239-939-1020 - Fax 239-939-3412 - Web-Site www.wilsonmiller.com

CLIENT: CENTEX HOMES
PROJECT: THE QUARY PHASE 2

DATE: FEB 2005
HORIZONTAL SCALE: 1" = 40'
VERTICAL SCALE: 1" = 4'
SEC: 14, 23 TWP: 48S RGE: 26E
CROSS REFERENCE FILE NO.: D-0442-48
PROJECT NUMBER: N0442-509-000

TITLE: PLAN AND PROFILE
COPPER ROCK COURT
STA. 0+00 TO END

LISA M. GIORDANO
LICENSE # 59318

INDEX NUMBER: D-0442-150
SHEET NUMBER: 29 OF 38

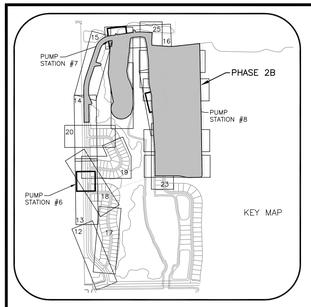

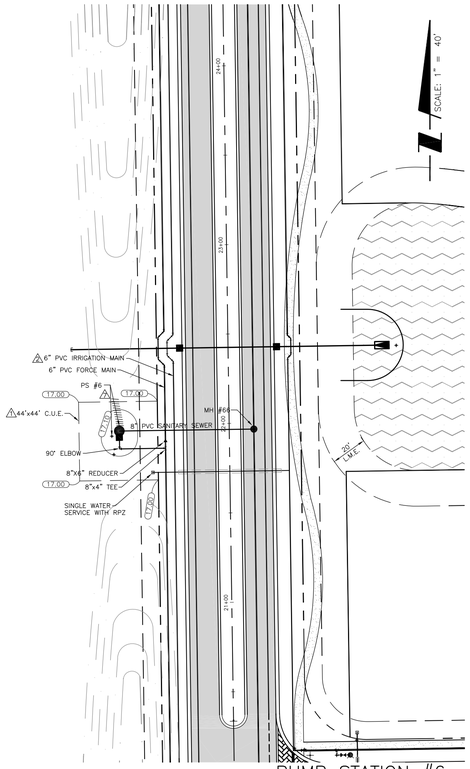

PUMP STATION #6

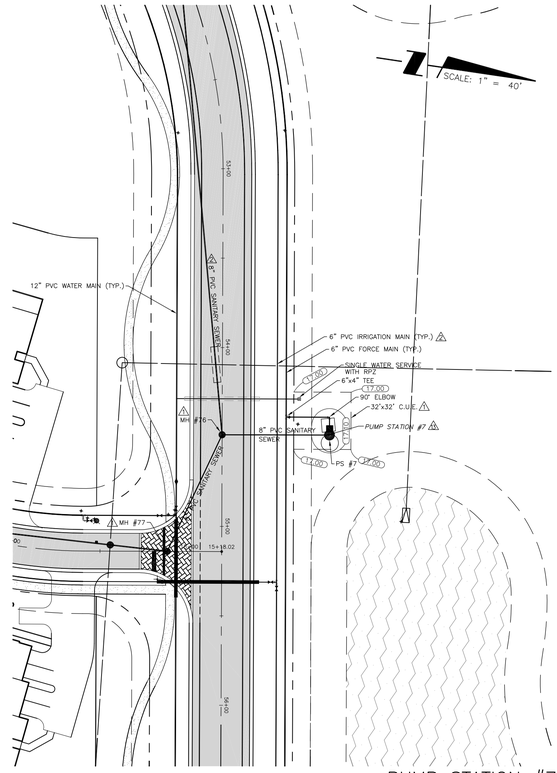

PUMP STATION #7

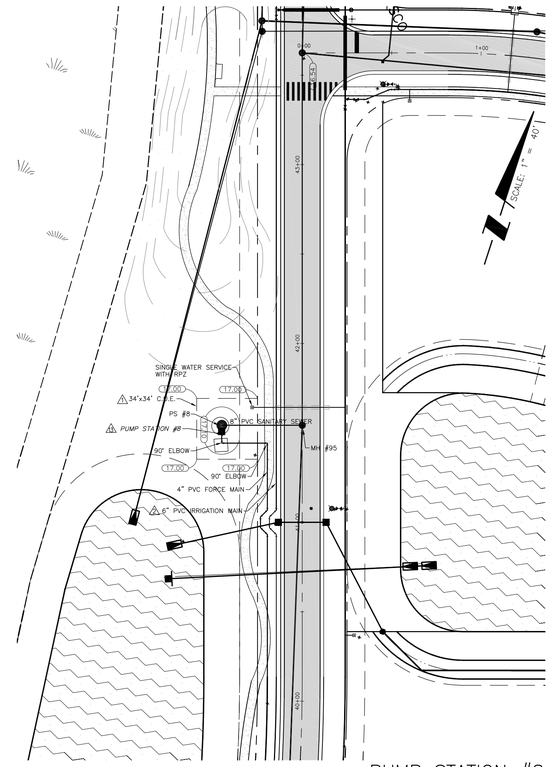

PUMP STATION #8

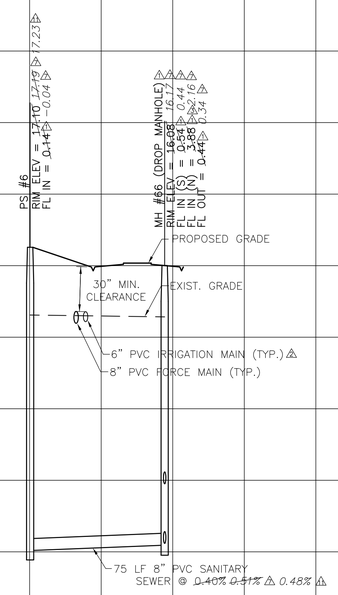

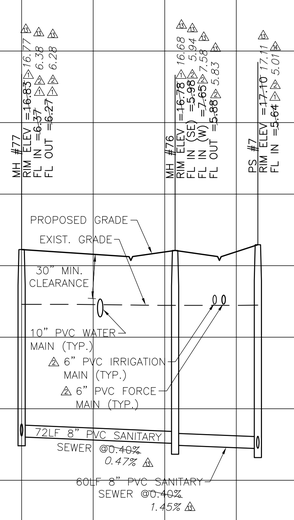

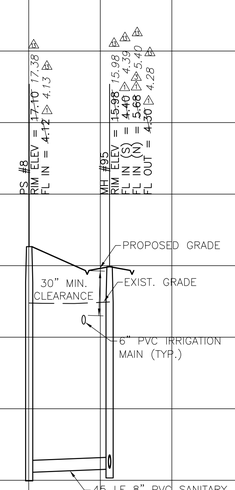

NOTE: RECORD PAVEMENT ELEVATIONS ARE FOR 1ST LIFT OF ASPHALT ONLY.

RECORD DRAWINGS
DATE: 8/20/06

THESE RECORD DRAWINGS ARE INTENDED TO DISPLAY THE COMPLETED WORK SUBSTANTIALLY AS CONSTRUCTED. THEY ARE BASED ON DATA PROVIDED TO THE ENGINEER, AND CERTIFIED BY, A REGISTERED PROFESSIONAL SURVEYOR AND MAPPER. FIELD VERIFICATION OF CONDITIONS AND LOCATIONS SHOULD BE UNDERTAKEN PRIOR TO ALTERATION OR CONSTRUCTION IN THE PROJECT AREA. 01/10/03

3	WATER AND SEWER ONLY (PHASE 2A)	08/20/06
2	PAVING, GRADING, AND DRAINAGE (PHASE 2A)	10/05/06
1	WATER AND SEWER ONLY (PHASE 2B)	12/14/06
1	PAVING, GRADING, AND DRAINAGE (PHASE 2B-1)	12/14/06

13	RECORD DRAWING REVISION – WATER AND SEWER ONLY – PHASE 2B	12/14/06	MPO/2348
11	REVISED UTILITIES CONVEYANCE PER ENGINEER COMMENTS	1/18/07	RRM/1482
7	RECORD DRAWING REVISION – WATER AND SEWER ONLY – PHASE 2A	8/14/06	MPO/2348
4	REVISED FOR INSUBSTANTIAL CHANGE	5/4/06	RRM/1482
3	REVISED PER FDEP COMMENTS AND PER ENGINEER	3/22/06	RRM/1482
2	REVISED PER ENGINEER & COUNTY COMMENTS	11/29/05	RRM/1482
1	REVISED PER COLLIER COUNTY COMMENTS	9/28/05	RRM/1482
△REV NO.	REVISION	DATE	DRAWN BY / EMP. NO.	CHECKED BY / EMP. NO.

Feb 07, 2008 – 16:04:38 TDASILVA(K:\ENG\N0442\150-QuarryPhase2\Rev14-rcrdPaving&Drainage\044215030.dwg

ACTIVITY	INITIALS/EMP. NO.	DATE
DESIGNED BY:	LMG/894	4/15/05
DRAWN BY:	RRM/1482	4/15/05
CHECKED BY:		
CONTRACT ADMIN. BY:		
WM APPROVED BY:		

WilsonMiller
Planners - Engineers - Ecologists - Surveyors - Landscape Architects - Transportation Consultants
WilsonMiller, Inc.
Naples - Fort Myers - Sarasota - Bradenton - Tampa - Tallahassee
4571 Colonial Boulevard, Suite 100 - Fort Myers, Florida 33912 - Phone 239-939-1020 - Fax 239-939-3412 - Web-Site www.wilsonmiller.com
WilsonMiller, Inc. – FL Lic # LC-0000176
WilsonMiller, Inc. – Certificate of Authorization #43

CLIENT: CENTEX HOMES
PROJECT: THE QUARRY PHASE2

DATE: FEB 2005
HORIZONTAL SCALE: 1" = 40'
VERTICAL SCALE: 1" = 4'
SEC: 14, 23 TWP: 48S RGE: 26E
CROSS REFERENCE FILE NO.: D-0442-48

TITLE: PLAN AND PROFILE
PUMP STATIONS #6, 7, 8

PROJECT NUMBER: N0442-509-000

LISA M. GIORDANO
LICENSE # 59318
INDEX NUMBER: D-0442-150
SHEET NUMBER: 30 OF 38

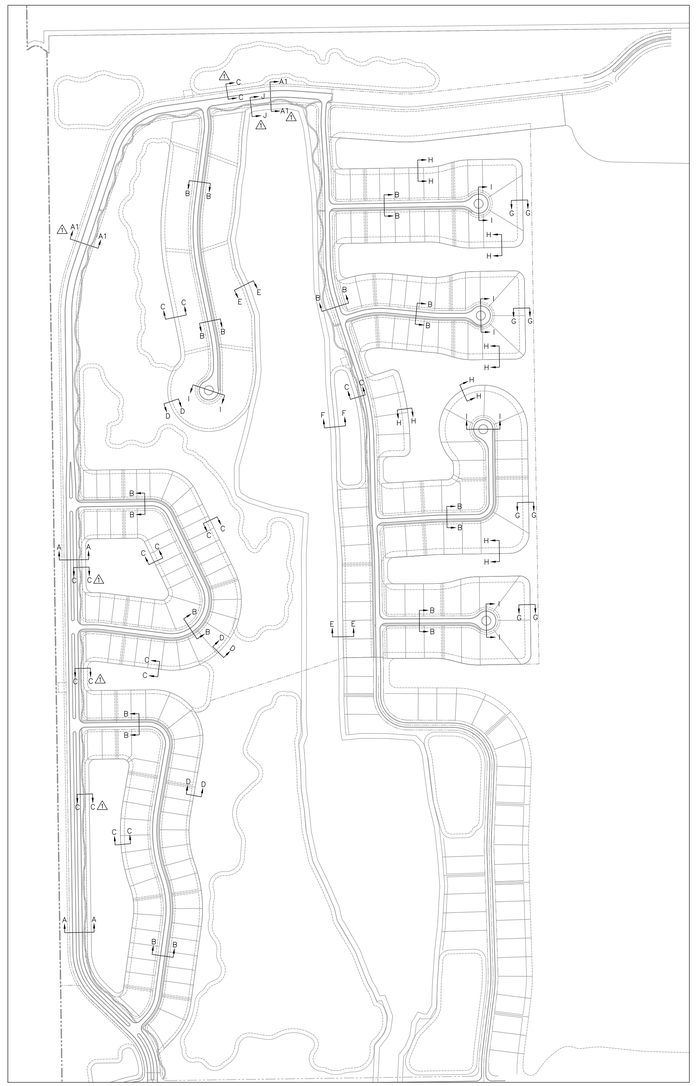

CROSS SECTION MAP

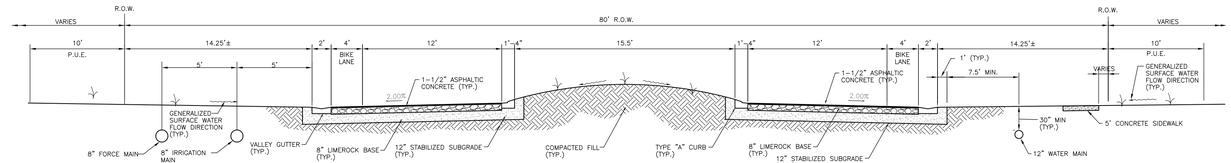

SECTION A–A
N.T.S.

ROADWAY RESTORATION NOTES:
1.) ONE FOOT OF STRIP SOD SHALL BE PLACED ALONGSIDE BACK–OF–CURB FOR ALL TYPICAL ROADWAY SECTIONS.
2.) ALL UNPAVED AREAS WITHIN RIGHT–OF–WAY SHALL BE SEEDED AND MULCHED (MINIMUM).

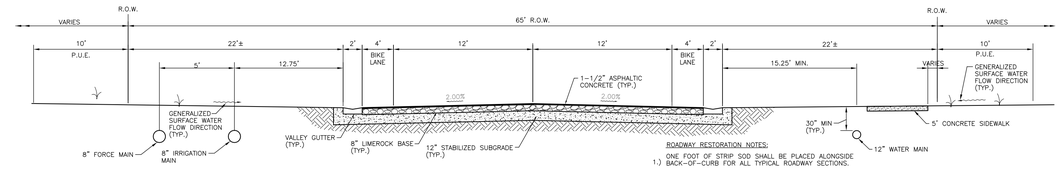

SECTION A1–A1
N.T.S.

ROADWAY RESTORATION NOTES:
1.) ONE FOOT OF STRIP SOD SHALL BE PLACED ALONGSIDE BACK–OF–CURB FOR ALL TYPICAL ROADWAY SECTIONS.
2.) ALL UNPAVED AREAS WITHIN RIGHT–OF–WAY SHALL BE SEEDED AND MULCHED (MINIMUM).

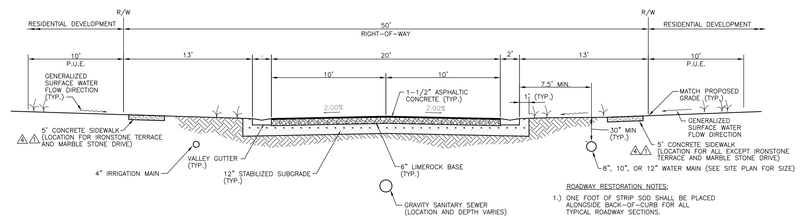

SECTION B–B
N.T.S.

ROADWAY RESTORATION NOTES:
1.) ONE FOOT OF STRIP SOD SHALL BE PLACED ALONGSIDE BACK–OF–CURB FOR ALL TYPICAL ROADWAY SECTIONS.
2.) ALL UNPAVED AREAS WITHIN RIGHT–OF– WAY SHALL BE SEEDED AND MULCHED (MINIMUM).

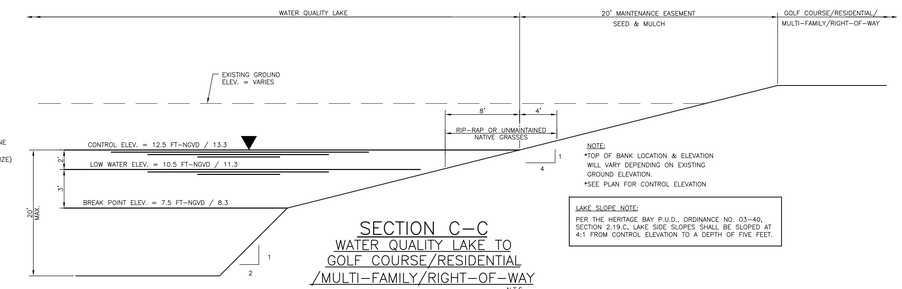

NOTE:
•TOP OF BANK LOCATION & ELEVATION WILL VARY DEPENDING ON EXISTING GROUND ELEVATION.
•SEE PLAN FOR CONTROL ELEVATION

LAKE SLOPE NOTE:
PER THE HERITAGE BAY P.U.D., ORDINANCE NO. 03–40, SECTION 2.19.C, LAKE SIDE SLOPES SHALL BE SLOPED AT 4:1 FROM CONTROL ELEVATION TO A DEPTH OF FIVE FEET.

SECTION C–C
WATER QUALITY LAKE TO GOLF COURSE/RESIDENTIAL /MULTI–FAMILY/RIGHT–OF–WAY
N.T.S.

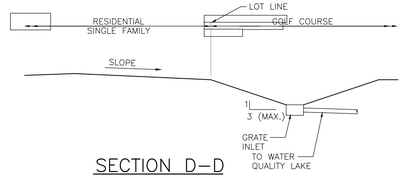

SECTION D–D
GOLF COURSE TO RESIDENTIAL SINGLE FAMILY/MULTI–FAMILY/ROW
N.T.S.

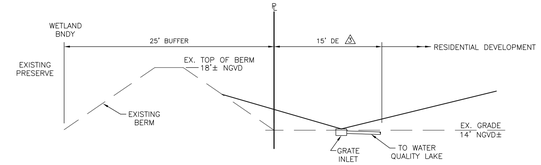

SECTION E–E
RESIDENTIAL TO EXISTING PRESERVE
N.T.S.

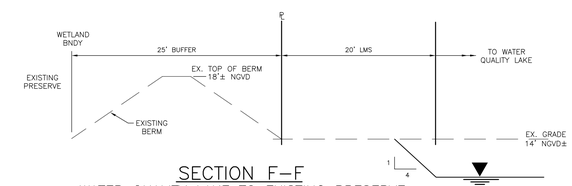

SECTION F–F
WATER QUALITY LAKE TO EXISTING PRESERVE
N.T.S.

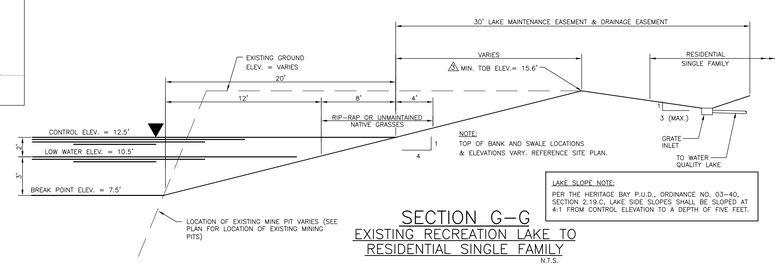

NOTE:
TOP OF BANK AND SWALE LOCATIONS & ELEVATIONS VARY. REFERENCE SITE PLAN.

LAKE SLOPE NOTE:
PER THE HERITAGE BAY P.U.D., ORDINANCE NO. 03–40, SECTION 2.19.C, LAKE SIDE SLOPES SHALL BE SLOPED AT 4:1 FROM CONTROL ELEVATION TO A DEPTH OF FIVE FEET.

SECTION G–G
EXISTING RECREATION LAKE TO RESIDENTIAL SINGLE FAMILY
N.T.S.

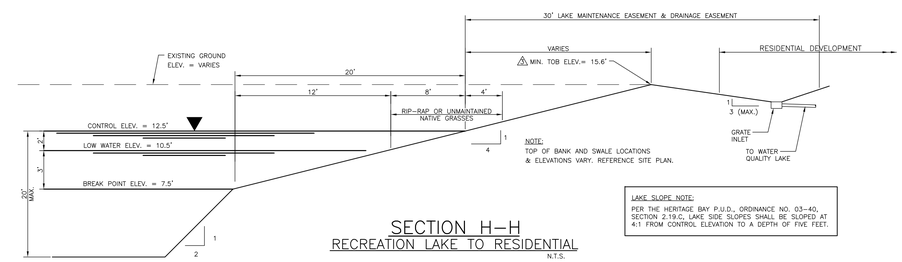

NOTE:
TOP OF BANK AND SWALE LOCATIONS & ELEVATIONS VARY. REFERENCE SITE PLAN.

LAKE SLOPE NOTE:
PER THE HERITAGE BAY P.U.D., ORDINANCE NO. 03–40, SECTION 2.19.C, LAKE SIDE SLOPES SHALL BE SLOPED AT 4:1 FROM CONTROL ELEVATION TO A DEPTH OF FIVE FEET.

SECTION H–H
RECREATION LAKE TO RESIDENTIAL
N.T.S.

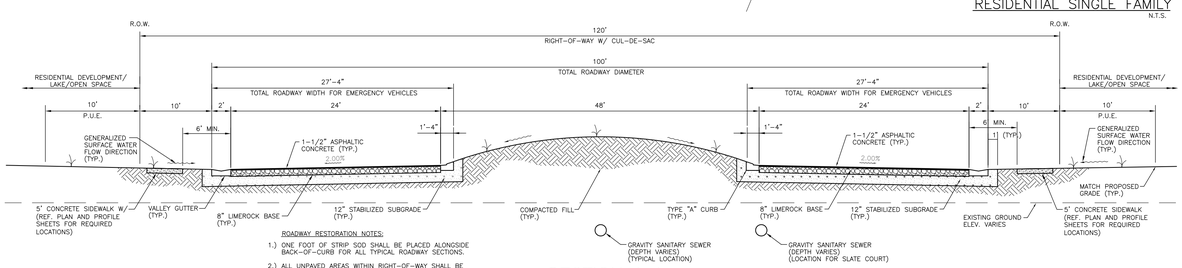

ROADWAY RESTORATION NOTES:
1.) ONE FOOT OF STRIP SOD SHALL BE PLACED ALONGSIDE BACK–OF–CURB FOR ALL TYPICAL ROADWAY SECTIONS.
2.) ALL UNPAVED AREAS WITHIN RIGHT–OF–WAY SHALL BE SEEDED AND MULCHED (MINIMUM).

SECTION I–I
TYPICAL CUL–DE–SAC DETAIL
N.T.S.

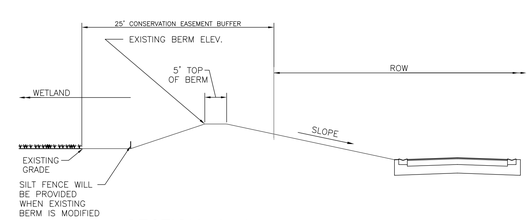

SECTION J–J
WETLAND TO RIGHT–OF–WAY
N.T.S.

RECORD DRAWINGS

DATE: 8/20/06

THESE RECORD DRAWINGS ARE INTENDED TO DISPLAY THE COMPLETED WORK SUBSTANTIALLY AS CONSTRUCTED. THEY ARE BASED ON DATA PROVIDED TO THE ENGINEER, AND CERTIFIED BY, A REGISTERED PROFESSIONAL SURVEYOR AND MAPPER. FIELD VERIFICATION OF CONDITIONS AND LOCATIONS SHOULD BE UNDERTAKEN PRIOR TO ALTERATION OR CONSTRUCTION IN THE PROJECT AREA. 01/07/03

1 WATER AND SEWER ONLY (PHASE 2A) 08/20/06
2 PAVING, GRADING, AND DRAINAGE (PHASE 2A) 10/05/06
3 WATER AND SEWER ONLY (PHASE 2B) 12/14/06
4 PAVING, GRADING, AND DRAINAGE (PHASE 2B–1) 12/14/06

REV NO.	REVISION	DATE	DRAWN BY / EMP. NO.	CHECKED BY / EMP. NO.
10	REVISED FOR UTILITIES CONVEYANCE	12/14/06	MPO/2348	
4	REVISED FOR INSUBSTANTIAL CHANGE	5/4/06	RRM/1482	
3	REVISED PER FDEP COMMENTS AND PER ENGINEER	3/22/06	RRM/1482	
1	REVISED PER COLLIER COUNTY COMMENTS	9/28/05	RRM/1482	

Feb 06, 2008 – 22:48:15 TDASILVA(K:\ENG\N0442\150-QuarryPhase2\Rev14-rcrdPaving&Drainage\044215031.dwg

ACTIVITY	INITIALS/EMP. NO.	DATE
DESIGNED BY:	LMG/894	4/15/05
DRAWN BY:	RRM/1482	4/15/05
CHECKED BY:		
CONTRACT ADMIN. BY:		
WM APPROVED BY:		

WilsonMiller
WilsonMiller, Inc. – FL Lic # LC-C000170
WilsonMiller, Inc. – Certificate of Authorization #43
Planners • Engineers • Ecologists • Surveyors • Landscape Architects • Transportation Consultants
WilsonMiller, Inc.
Naples • Fort Myers • Sarasota • Bradenton • Tampa • Tallahassee
4571 Colonial Boulevard, Suite 100 • Fort Myers, Florida 33912 • Phone 239-939-1020 • Fax 239-939-3412 • Web-Site www.wilsonmiller.com

CLIENT: CENTEX HOMES
PROJECT: THE QUARRY PHASE 2

DATE: FEB 2005
HORIZONTAL SCALE: AS NOTED
VERTICAL SCALE: AS NOTED
SEC: 14, 23 TWP: 48S RGE: 26E

TITLE: CROSS SECTIONS

LISA M. GIORDANO LICENSE # 59318

INDEX NUMBER: D–0442–150
CROSS REFERENCE FILE NO.: D–0442–48
PROJECT NUMBER: N0442–509–000
SHEET NUMBER: 31 OF 38

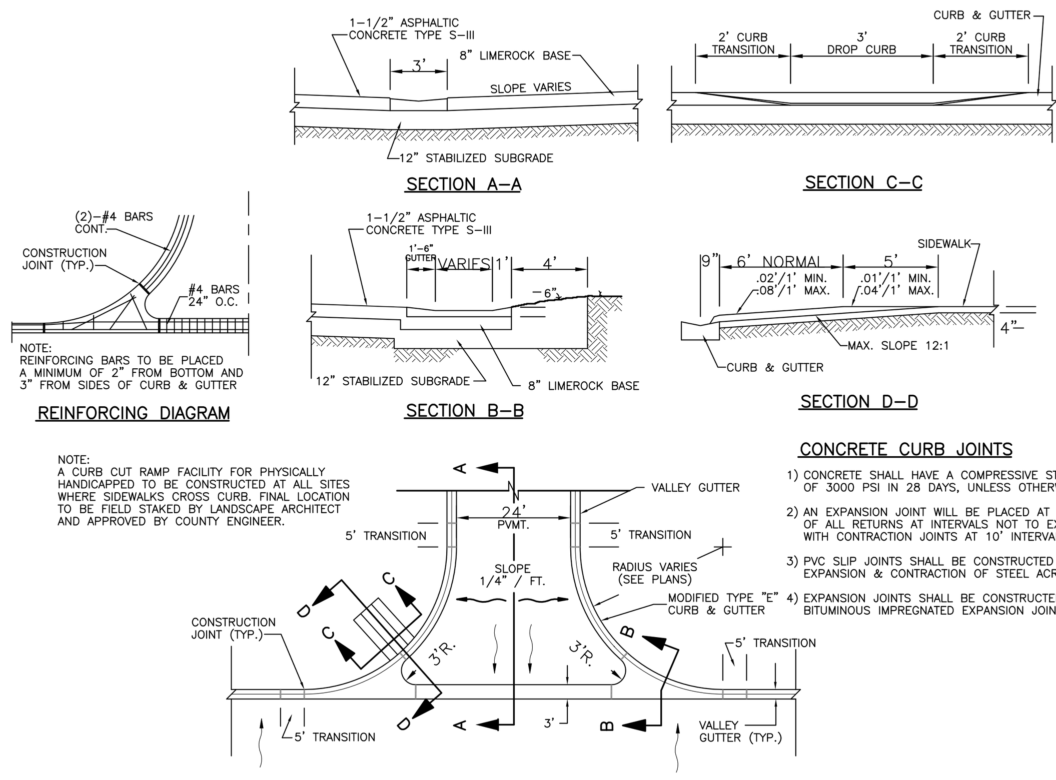

CONCRETE CURB JOINTS

1) CONCRETE SHALL HAVE A COMPRESSIVE STRENGTH OF 3000 PSI IN 28 DAYS, UNLESS OTHERWISE NOTED.
2) AN EXPANSION JOINT WILL BE PLACED AT THE END OF ALL RETURNS AT INTERVALS NOT TO EXCEED 50' WITH CONTRACTION JOINTS AT 10' INTERVALS BETWEEN.
3) PVC SLIP JOINTS SHALL BE CONSTRUCTED TO PERMIT EXPANSION & CONTRACTION OF STEEL ACROSS JOINT.
4) EXPANSION JOINTS SHALL BE CONSTRUCTED WITH 1/2" BITUMINOUS IMPREGNATED EXPANSION JOINT MATERIAL.

TYPICAL VALLEY CROSSING DETAIL (VALLEY GUTTER)

N.T.S.

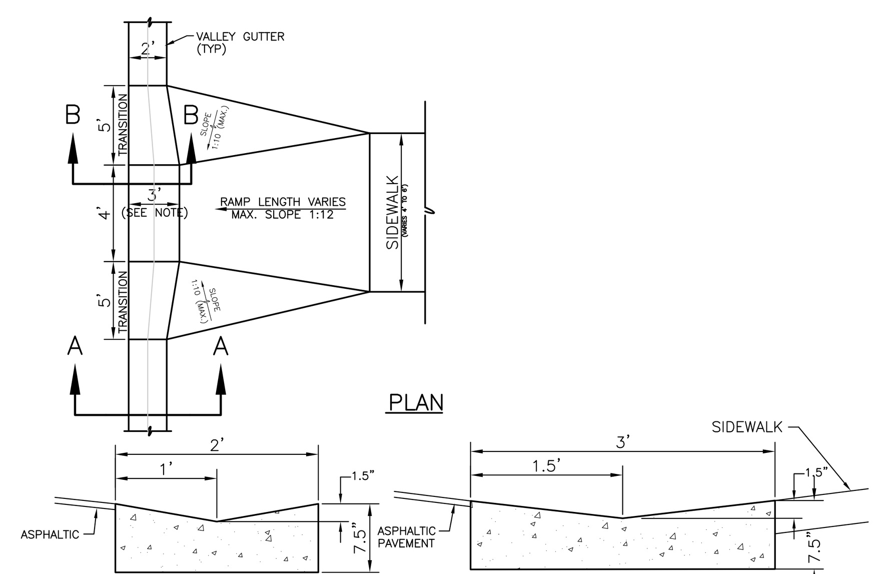

NOTES:
1.) IF VALLEY GUTTER IS 7.5" DEEP WITH 1.5" VALLEY, 3' DIMENSION AT RAMP IS SUFFICIENT TO ATTAIN 1:12 SLOPE.
2.) IF VALLEY GUTTER IS 8" DEEP WITH 2" VALLEY, THEN WIDTH OF GUTTER MUST BE 4'-0 TO ATTAIN 1:12 SLOPE.

ADA COMPLIANT CURB RAMP CONFIGURATION FOR VALLEY GUTTER

N.T.S.

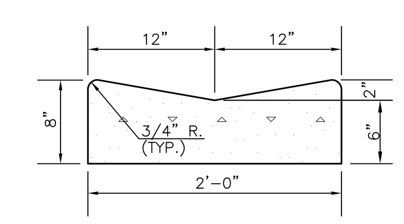

NOTES:
1) WHEN USED ON THE HIGH SIDE OF THE ROADWAYS THE CROSS SLOPE OF THE GUTTER SHALL MATCH THE CROSS SLOPE OF THE ADJACENT PAVEMENT AND THE THICKNESS OF THE LIP WILL BE LESS.
2) AN EXPANSION JOINT WILL BE PLACED AT THE END OF ALL RETURNS AT INTERVALS NOT TO EXCEED 50' WITH CONTRACTION JOINTS AT 10' INTERVALS BETWEEN.
3) EXPANSION JOINTS SHALL BE CONSTRUCTED WITH 1/2" BITUMINOUS IMPREGNATED EXPANSION JOINT MATERIAL

(FDOT. REF. INDEX #300)

VALLEY GUTTER

N.T.S.

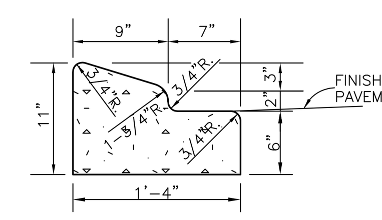

NOTES:
1) CONCRETE SHALL HAVE A COMPRESSIVE STRENGTH OF 3,000 P.S.I. IN 28 DAYS UNLESS OTHERWISE NOTED
2) AN EXPANSION JOINT WILL BE PLACED AT THE END OF ALL RETURNS AT INTERVALS NOT TO EXCEED 50' WITH CONTRACTION JOINTS AT 10' INTERVALS BETWEEN.
3) EXPANSION JOINTS SHALL BE CONSTRUCTED WITH 1/2" BITUMINOUS IMPREGNATED EXPANSION JOINT MATERIAL.

(FDOT REF. INDEX #300)

TYPE "A" CURB

N.T.S.

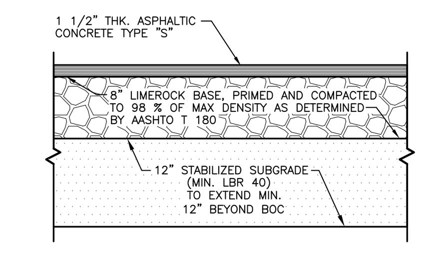

NOTE:
ASPHALT PAVEMENT SHALL BE PAVED IN TWO 3/4" LIFTS

TYPICAL ASPHALT PAVEMENT SECTION

N.T.S.

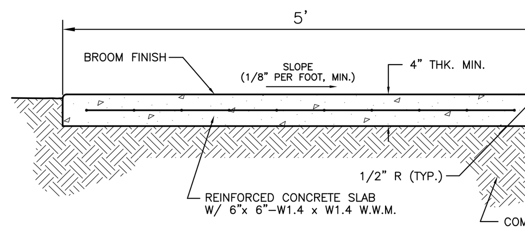

NOTES:
1.) THE PROPOSED FILL SHALL BE COMPACTED IN 12" LIFTS TO 98% OF THE MAXIMUM DENSITY IN ACCORDANCE WITH AASHTO T-180 AND THE ENGINEERS TECHNICAL SPECIFICATIONS.
2.) REINFORCING SHALL BE 6"x 6"-W1.4 x W1.4 WELDED WIRE MESH.
3.) CONCRETE SHALL HAVE A COMPRESSIVE STRENGTH OF 3,000 P.S.I. IN 28 DAYS, UNLESS OTHERWISE NOTED.
4.) SUBGRADE SHALL BE SAND, COMPACTED TO A FIRM EVEN SURFACE, TRUE TO GRADE AND CROSS-SECTION, AND BE MOIST WHEN CONCRETE IS PLACED.
5.) SIDEWALK SHALL HAVE CONTRACTION JOINTS AT 5' INTERVALS AND AN EXPANSION JOINT EVERY 100'.
6.) CONCRETE SIDEWALK CURB RAMPS SHALL BE CONSTRUCTED IN ACCORDANCE WITH FDOT 2002 DESIGN INDEX SECTION 304.
7.) CONCRETE SIDEWALK SHALL BE CONSTRUCTED IN ACCORDANCE WITH THE LATEST ADA REVISION STANDARDS.
8.) SIDEWALKS SHALL BE CONSTRUCTED OF 4" THICK PORTLAND CEMENT CONCRETE.

⚠1 TYPICAL CONCRETE SIDEWALK DETAIL

N.T.S.

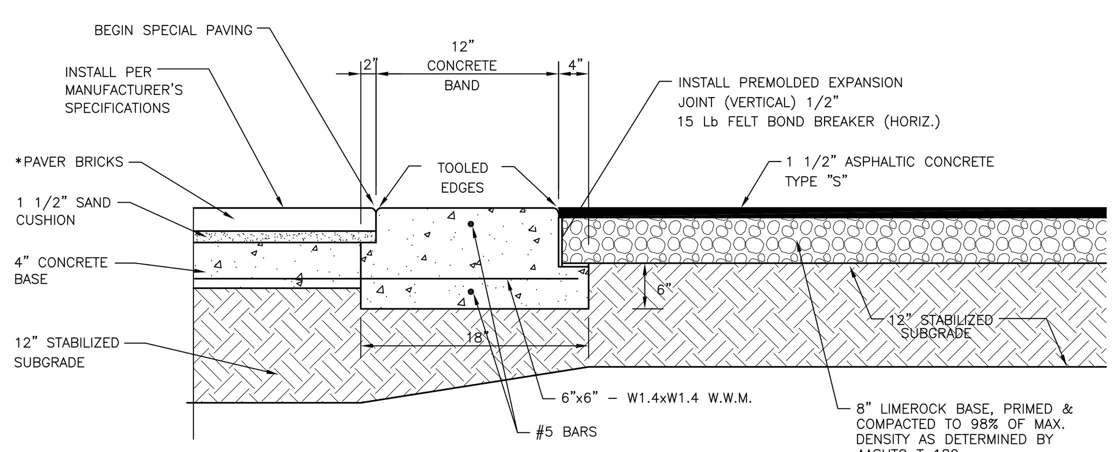

* NOTE: THICKNESS VARIES PER PAVER BRICK

NOTE:
CONCRETE TO BE 4,000 P.S.I. WITH MAXIMUM SLUMP OF 4"

CONCRETE RIBBON AND PAVER BRICK INTERFACE EDGE RESTRAINT DETAIL

N.T.S.

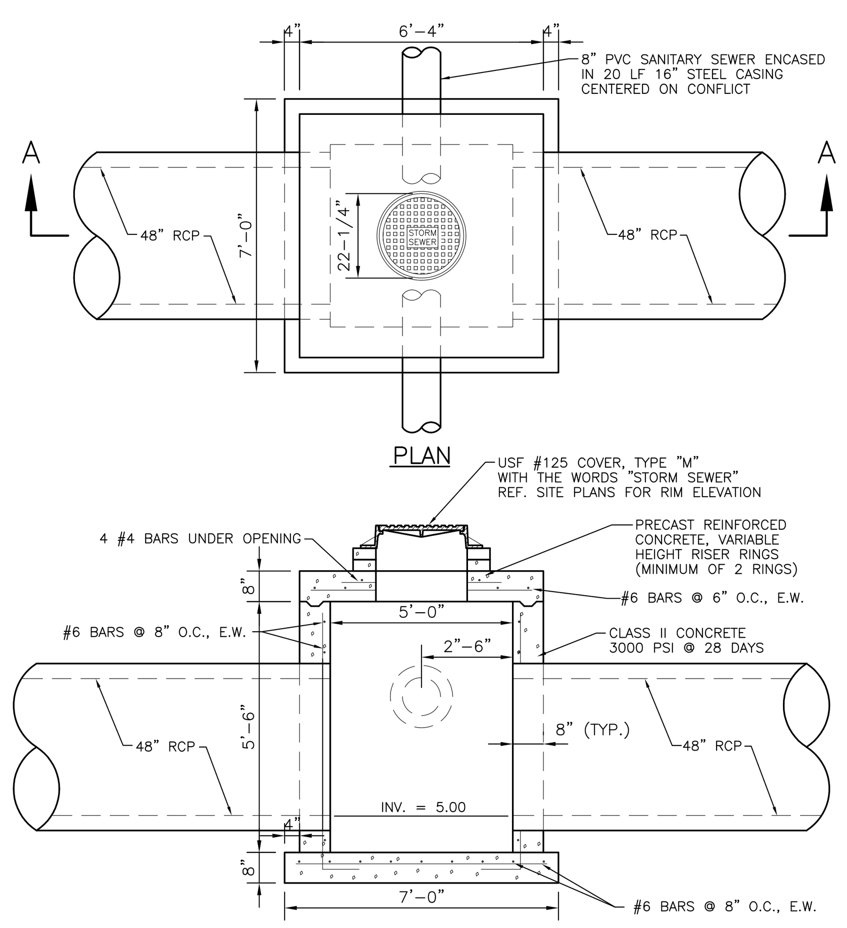

⚠6 CONFLICT BOX

N.T.S.

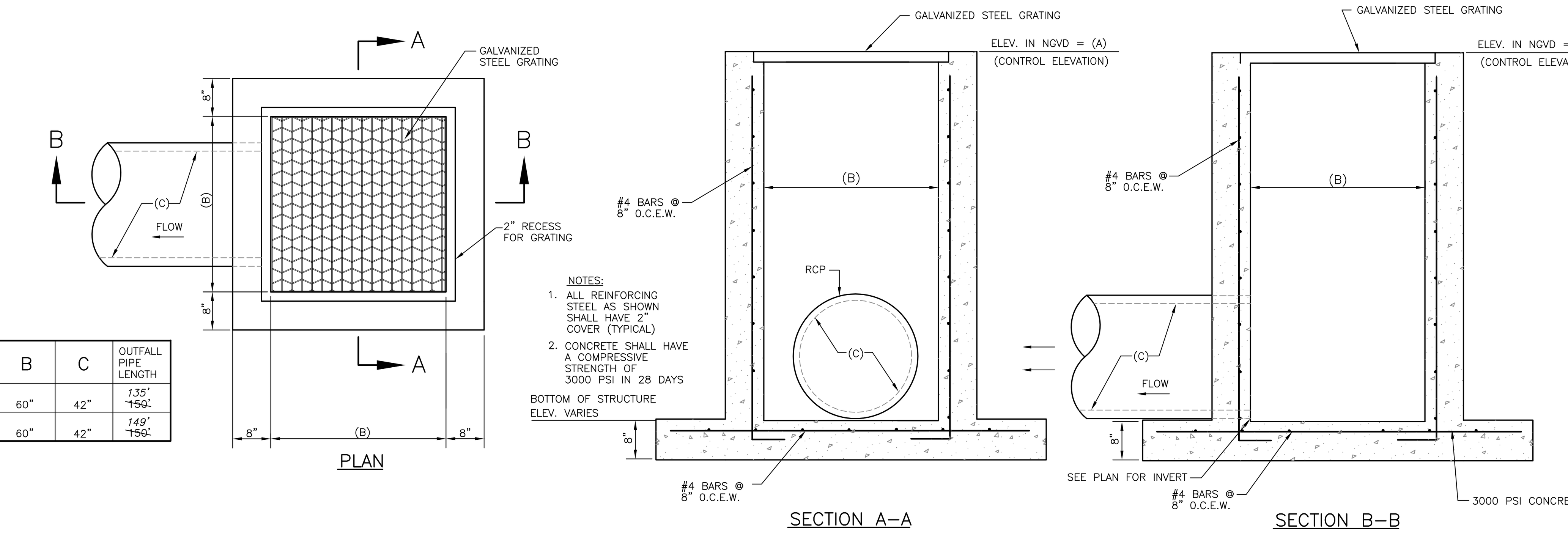

	WEIR	A	B	C	OUTFALL PIPE LENGTH
⚠14	L54L30-1	14.13' ~~13.3'~~	60"	42"	135' ~~150'~~
⚠14	L54L30-2	13.50' ~~13.3'~~	60"	42"	149' ~~150'~~

NOTES:
1. ALL REINFORCING STEEL AS SHOWN SHALL HAVE 2" COVER (TYPICAL)
2. CONCRETE SHALL HAVE A COMPRESSIVE STRENGTH OF 3000 PSI IN 28 DAYS

BOTTOM OF STRUCTURE ELEV. VARIES

CONTROL STRUCTURES ⚠3

(SEE TABLE)

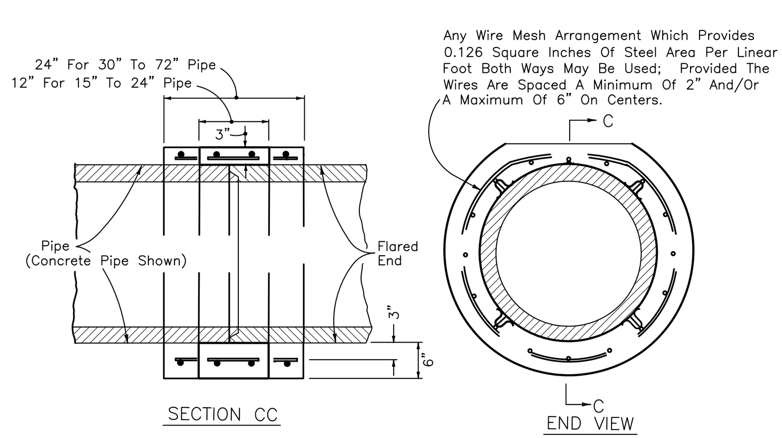

⚠1 REINFORCED CONCRETE JACKET DETAIL

N.T.S.

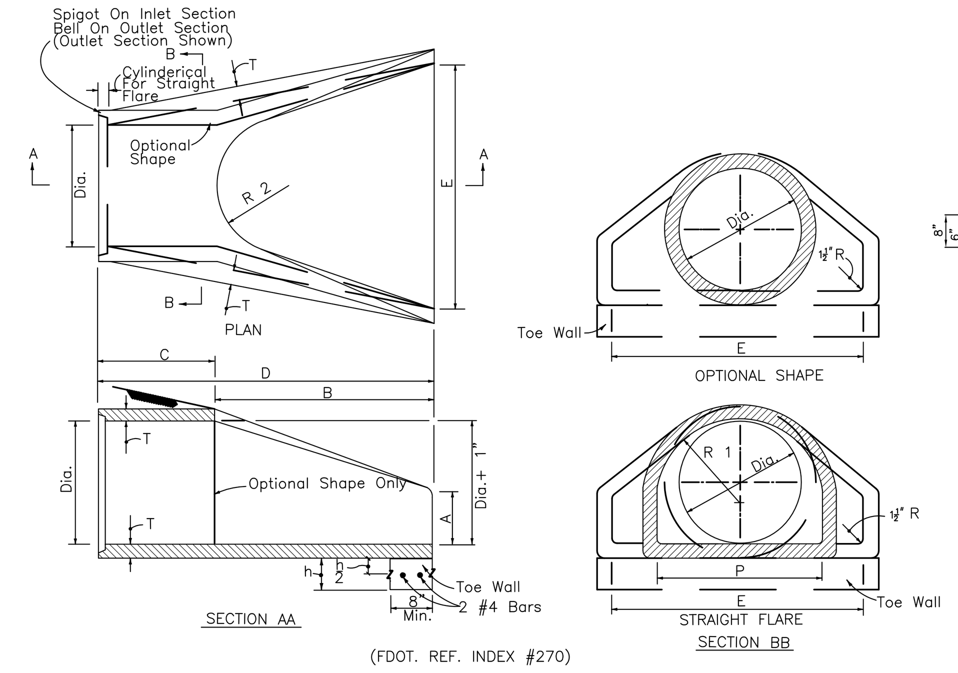

(FDOT. REF. INDEX #270)

FLARED END SECTION

N.T.S.

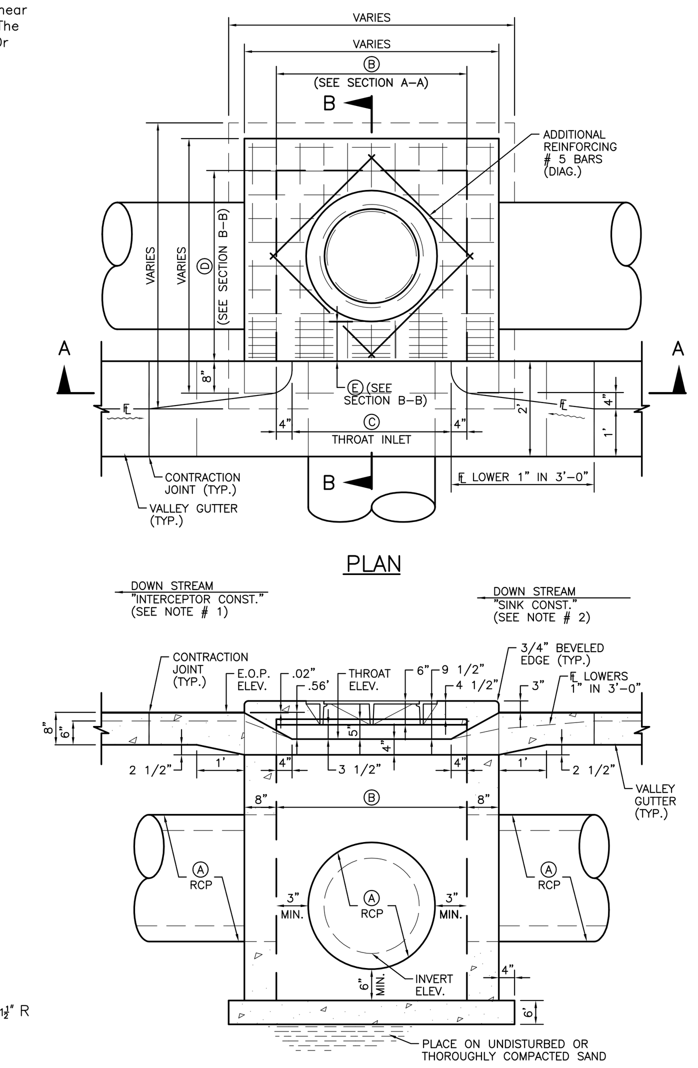

DESIGN NOTES:

1.) INTERCEPTOR CONSTRUCTION: WHEN INLET FUNCTIONS AS AN INTERCEPTOR, THE DOWNSTREAM PART OF VALLEY GUTTER SHALL BE CONSTRUCTED AS SHOWN ON THE LEFT OF PLAN VIEW AND SECTION A-A. (STRUCTURE AND VALLEY GUTTER ARE SYMMETRICAL)
2.) SINK CONSTRUCTION: WHEN INLET FUNCTIONS AS A SINK, THE VALLEY GUTTER FLOW SHALL LOWER ONE INCH (1") PER THREE FEET (3') AND TRANSITIONS AS SHOWN ON RIGHT OF PLAN VIEW AND SECTION A-A. (CONSTRUCTION & VALLEY GUTTER ARE SYMMETRICAL)
3.) WHEN INLET IS USED ON CURVED CURB SECTIONS, FRONT FACE OF BOX SHALL BE POURED RADIAL TO CURB.
4.) ALL REINFORCING STEEL AS SHOWN SHALL HAVE TWO INCH (2") MINIMUM COVER.
5.) ALL CONCRETE SHALL HAVE A COMPRESSIVE STRENGTH OF 3,000 PSI @ 28 DAYS.

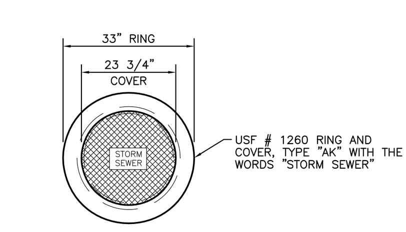

MANHOLE COVER

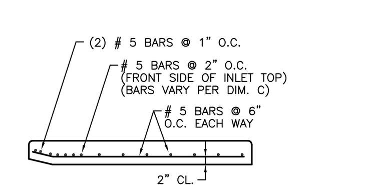

TOP SLAB SECTION

DIMENSION TABLE

Ⓐ	Ⓑ	Ⓒ	Ⓓ	Ⓔ
15"	48"	48"	48"	10" MIN.
18"	48"	48"	48"	10" MIN.
24"	48"	48"	48"	10" MIN.
30"	48"	48"	48"	10" MIN.
36"	48"	48"	48"	10" MIN.
42"	48"	48"	48"	10" MIN.
48"	54"	48"	54"	10" MIN.
54"	60"	48"	60"	12" MIN.

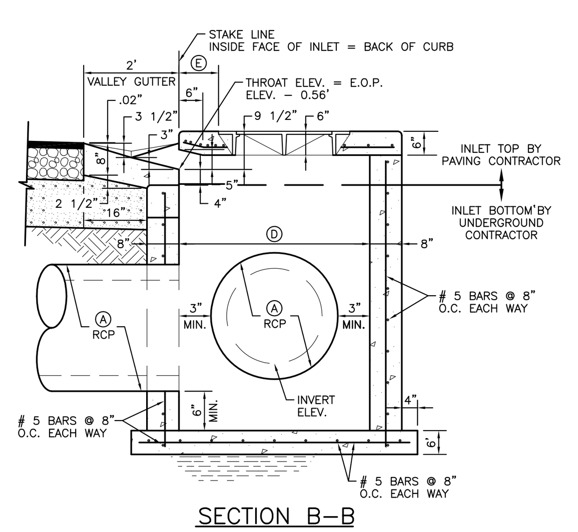

THROAT INLET DETAIL

(WITH VALLEY GUTTER) N.T.S.

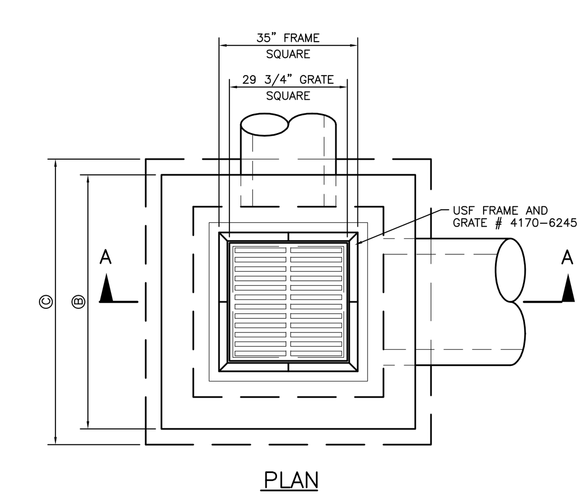

DIMENSION TABLE

Ⓐ	Ⓑ	Ⓒ	Ⓓ
15"	52"	60"	36"
18"	52"	60"	36"
24"	58"	66"	42"
30"	64"	72"	48"
36"	70"	78"	54"
42"	76"	84"	60"
48"	88"	96"	72"
54"	94"	102"	78"

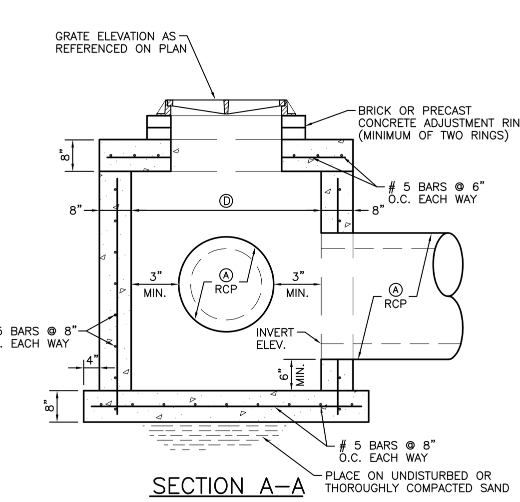

DESIGN NOTES FOR STRUCTURES:

1.) ALL REINFORCING STEEL AS SHOWN SHALL HAVE TWO INCHES (2") MINIMUM COVER.
2.) ALL CONCRETE SHALL HAVE A COMPRESSIVE STRENGTH OF 3,000 PSI @ 28 DAYS.
3.) REFERENCE FDOT "ROADWAY AND TRAFFIC DESIGN STANDARDS" DATED JANUARY 2002 (INDEX 200.) FOR REINFORCING STEEL.
4.) STRUCTURES THAT ARE TO BE EQUIPPED WITH ALUMINUM BAFFLES OVER THE OUTFALL PIPE SHALL PROVIDE A MIN. OF 12" FROM THE BOTTOM OF THE STRUCTURE TO THE BOTTOM OF THE OUTFALL PIPE IN ORDER TO PROVIDE ADEQUATE CLEARANCE FROM THE BOTTOM OF THE BAFFLE TO THE BOTTOM OF THE STRUCTURE.

GRATE INLET DETAIL

N.T.S.

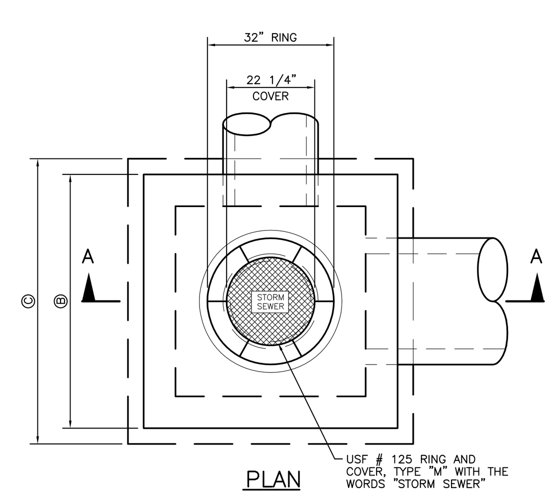

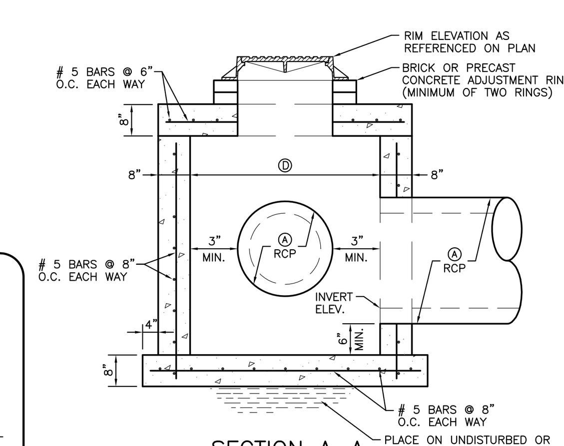

JUNCTION BOX DETAIL

N.T.S.

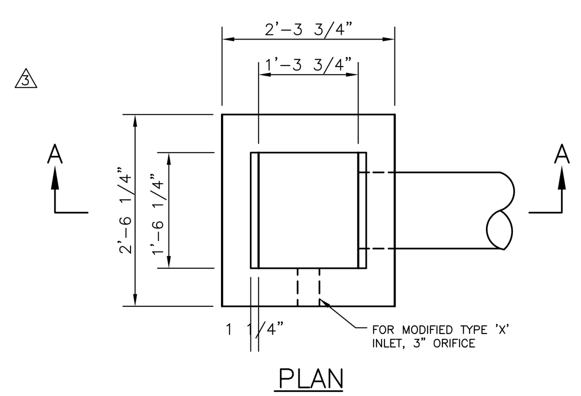

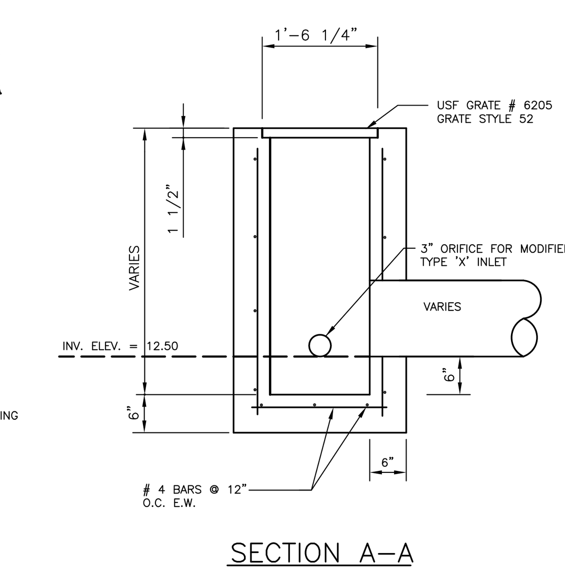

TYPE "X" INLET DETAIL

N.T.S.

(AND MODIFIED TYPE 'X' INLET DETAIL)

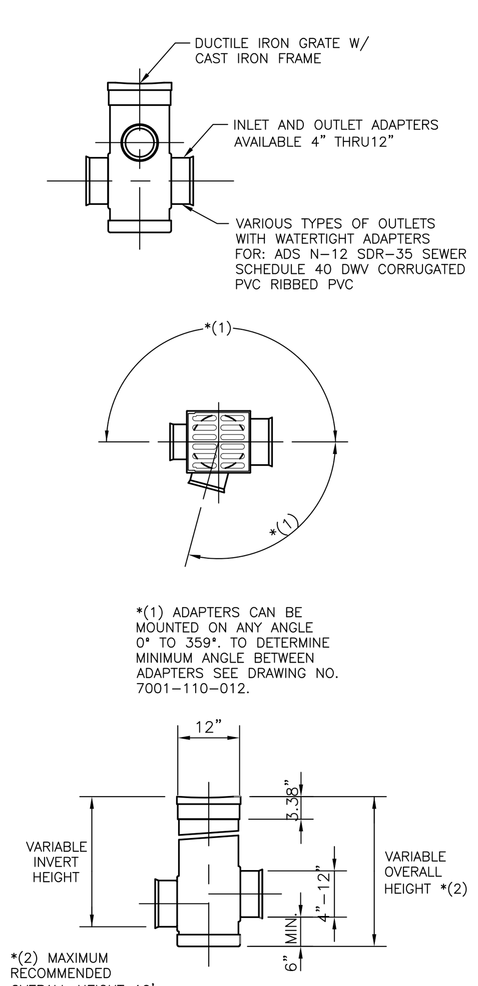

12" DRAIN BASIN

YARD DRAIN BASIN DETAIL

N.T.S.

RECORD DRAWINGS

DATE: 8/20/06

THESE RECORD DRAWINGS ARE INTENDED TO DISPLAY THE COMPLETED WORK SUBSTANTIALLY AS CONSTRUCTED. THEY ARE BASED ON DATA PROVIDED TO THE ENGINEER, AND CERTIFIED BY, A REGISTERED PROFESSIONAL SURVEYOR AND MAPPER. FIELD VERIFICATION OF CONDITIONS AND LOCATIONS SHOULD BE UNDERTAKEN PRIOR TO ALTERATION OR CONSTRUCTION IN THE PROJECT AREA. 01/07/03

- ⚠7 *WATER AND SEWER ONLY (PHASE 2A)* 08/20/06
- ⚠9 *PAVING, GRADING, AND DRAINAGE (PHASE 2A)* 10/05/06
- ⚠13 *WATER AND SEWER ONLY (PHASE 2B)* 12/14/06
- ⚠14 *PAVING, GRADING, AND DRAINAGE (PHASE 2B-1)* 12/14/06

REV NO.	REVISION	DATE	DRAWN BY / EMP. NO.	CHECKED BY / EMP. NO.
14	RECORD DRAWING REVISION - PAVING, GRADING, AND DRAINAGE - PHASE 2B	12/14/06	MPO/2348	
10	REVISED FOR UTILITIES CONVEYANCE	12/14/06	MPO/2348	
6	REVISED FOR UTILITY DEVIATION	6/20/06	RRM/1482	
3	REVISED PER FDEP COMMENTS AND PER ENGINEER	3/22/06	RRM/1482	
1	REVISED PER COLLIER COUNTY COMMENTS	9/28/05	RRM/1482	

Feb 06, 2008 - 22:46:02 TDASILVA|X:\ENG\N0442\150-QuarryPhase2\Rev14-rcrdPaving&Drainage\044215032.dwg

ACTIVITY	INITIALS/EMP. NO.	DATE
DESIGNED BY:	LMG/894	4/15/05
DRAWN BY:	RRM/1482	4/15/05
CHECKED BY:		
CONTRACT ADMIN. BY:		
WM APPROVED BY:		

WilsonMiller

WilsonMiller, Inc. - FL Lic.# LC-C000170
WilsonMiller, Inc. - Certificate of Authorization #43

Planners • Engineers • Ecologists • Surveyors • Landscape Architects • Transportation Consultants
WilsonMiller, Inc.
Naples • Fort Myers • Sarasota • Bradenton • Tampa • Tallahassee
4571 Colonial Boulevard, Suite 100 • Fort Myers, Florida 33912 • Phone 239-939-1020 • Fax 239-939-3412 • Web-Site www.wilsonmiller.com

CLIENT: CENTEX HOMES

PROJECT: THE QUARRY PHASE 2

DATE: FEB 2005
HORIZONTAL SCALE: AS NOTED
VERTICAL SCALE: AS NOTED
SEC: TWP: RGE: 14, 23 48S 26E

TITLE: PAVING & DRAINAGE DETAILS

CROSS REFERENCE FILE NO.: D-0442-48
PROJECT NUMBER: N0442-509-000

LISA M. GIORDANO
LICENSE # 59318

INDEX NUMBER: D-0442-150
SHEET NUMBER: 32 OF 38

5F.

VARIANCE EASEMENTS

PENDING APPLICATIONS

Applicant		Property Address	Email	Scope of Work	Application Received by Inframark	Application sent to Albert	Pending Further Review
Surname	First Name						
	Quartz Cove at the Quarry Condiuminum Association, Inc	5435 Jaeger Road #4		Fountain installation request			
Haidet	Andrew & Whitney	9253 Quarry Drive	haidetmd@gmail.com	floating dock and lift	25-May-22	6-Jun-22	

APPROVED APPLICATIONS

Applicant		Property Address	Email	Scope of Work	Application Received by Inframark	Application sent to Albert	Application Approved	Recorded
Surname	First Name							
Friday	Tamara & Charles	9337 Quarry Drive	charles.Friday@icloud.com	Install dock, firepit and walkway from the driveway to the dock	11-Mar-22	11-Mar-22	4/18/2022 & 4/17/2023	**17-Jun-22**
Stowell	Matt	9324 Granite Ct	mjstowall@gmail.com	dock lift	11-Mar-22	11-Mar-22	18-Apr-22	**20-Jun-22**
		9416 Copper Rock Court		encroachment into the 7.5' drainage easement			21-Mar-22	
Hofkes	John & Mary	9051 Breakwater Drive	lamal@charter.net	3' x 6 1/2 landing outside west lanai door at grade (2' x 6 1/2) in easement	16-Aug-21	16-Aug-21	23-Feb-22	**17-Jun-22**
Mulvey	Andy	9403 Copper Rock Court	awmmdp@yahoo.com	installation of boat dock behind home	6-Oct-21	11-Oct-21	15-Nov-21	
Beatty	Dustin	9179 Flint Ct	dustinbeatty@icloud.com	floating dock and 4400# lift	22-Jul-21		15-Nov-21	
Hill	D. Kent	9407 Quarry Dr	hillkent@hotmail.com	H shaped dock with boat lift and canopy	11-Oct-21		15-Nov-21	**withdrawn**
Martins	Richard & Elaine	9075 Graphite Circle	REJMM5@aol.com	install J design dock	25-Aug-21	25-Aug-21	20-Sep-21	**17-Nov-21**
Turnman	Timothy & Linda	9237 Gypsum Way	ltturnman@aol.com	moved dock from 9172 Flint Ct	6-Jan-21	11-Jan-21	4-Feb-21	**15-Nov-21**

Curry	Kevin	9176 Flint Ct	kevincurry.55@gmail.com	Boat lift and repair	15-Oct-20	12-Nov-20	Yes	
DaBaene	Kenneth	9043 Graphite Circle	kendabaene@yahoo.com	Repair walkway	15-Oct-20	12-Nov-20	Yes	
Forster	Barbara	9286 Marblestone Dr	m@forsterusa.com	Boat dock installation	Yes		13-Jul-20	
Gober	Douglas & Linda	9830 Slate Ct	dgobe1@comcast.net lindagobermk@comcast.net	Remove and replace installation	7-Aug-20	7-Aug-20	Yes	
Kramer	Adrian L	9396 Slate Ct	akramer@hollyconst.com	boat deck	11-Dec-19	11-Dec-19	Yes	
McFarlene	Tracy	9273 Quarry Drive	audiotracy@gmail.com	installing floating dock 15 x 20 w/6' walkway	22-Jan-21	26-Jan-21	25-Feb-21	
Moore	Geoffrey A. (Trust)	9719 Nickel Ridge Circle	deborahbmoore@yahoo.com	Brick paver, walkway	22-Jan-21	26-Jan-21	19-Apr-21	**22-Jul-21**
Omland	Stan & Nanci	9293 Quarry Dr	somland@omland.com	install paver walk through LME of existing elevations	22-Jun-20	22-Jun-20	Yes	Yes
Parker	Donald G.	8822 Spinner Cove Ln	dgparker1047@yahoo.com	Dock Repair	10-Sep-20	8-Oct-20	Yes	
Taylor	Scott J and Rhonda M.	9332 Granite Ct	sjtoneup@gmail.com	paver walkway to dock with paver landing in front of deck, and	6-Nov-19	11-Dec-19	Yes	20-Mar-23
Haidet	Andrew & Whitney	9253		floating dock & lift	25-May-22	6-Jun-22	Yes	13-Jul-22
Peterson	Mark & Jane - Trustees JMP Investment Holdings	9262 Marble Stone Drive	mpp@mrrhino.com jmp@mrrhino.com	Dock and boat lift	17-May-22	6-Jun-22	Yes	20-Mar-23

5Fvi.

QUARRY COMMUNITY DEVELOPMENT DISTRICT
APPLICATION FORM
FOR VARIANCE FROM EASEMENT

This form should be completed by homeowners who are applying to the Quarry Community Association ("HOA") to install improvements on a lot, where such installation may impact the easement rights of the Quarry Community Development District ("CDD"). Notably, the CDD is responsible for the stormwater system and conservation areas serving the community, and, accordingly, holds certain rights in, among other lands, all "Drainage Easements," "Lake Maintenance Easements," and "Conservation Easements." It is the homeowner's responsibility to carefully review all property records and ensure that the homeowner and his or her contractor do not construct improvements (e.g., fences, landscaping, sprinklers, patios, decks, air conditioners, pools, etc.) within any such easement areas. (Note that such easements are identified on the community plats, but the plats may or may not correctly identify the CDD as the responsible party. Please contact the CDD if you are in doubt about any such easements.)

While the CDD discourages such requests, the CDD may in its sole discretion elect to grant limited variances in order to allow improvements to be placed in an easement area where the improvements will not materially affect the CDD's stormwater system. To obtain such a variance, a homeowner must:

1. Complete this Application Form.
2. Provide a copy of any application materials submitted to the HOA, including but not limited to:
   a. Site Plan,
   b. Sketch of Work, and
   c. Design Plans
3. Submit a check for $500.00 to the CDD for the CDD's cost to review the application. Additional fees may be charged as well at cost, in the event that the CDD is required to spend additional monies on engineering and/or other consultants to review the application.
4. Complete and execute a Variance Agreement for Installation of Improvements within CDD Easement ("Variance Agreement").
5. Provide a Certificate of Insurance showing: 1) bodily injury and property damage liability insurance in the amount of $1,000,000 per occurrence, 2) statutory worker's compensation insurance, 3) employer's liability insurance, and 4) automobile liability insurance in the amount of $1,000,000 per occurrence, all of which shall be maintained in force for the duration of the work. The Certificate shall name the CDD as an additional insured.

Once the information is provided, it will be reviewed by the CDD Staff, and your property will be inspected to determine whether a variance is appropriate. Then, a final determination will be made by either CDD Staff and/or the CDD's Board of Supervisors, and a notice will be sent indicating whether your application was approved or denied.

If your application is approved, the Owner shall notify the CDD prior to commencing work and upon completing work, so that the CDD may inspect the applicable easement area. Any such inspection shall not be deemed an approval by the CDD of any work, and the CDD shall retain all rights to enforce the terms of the Variance Agreement.

Please provide the following information:

1. Property Owner Name(s): Craig & Debra Nikrant

2. Property Address: 9388 Slate Ct.

3. Cell Phone of Owner: 440-320-4270

4. Email Address of Owner: CNIKRANT@GMAIL.COM

5. Describe Scope of Work: Floating Boat Dock & Lift Installation

6. Estimated Start Date: As soon as approved

7. Estimated Completion Date:

8. Name and Contact Information for Contractor(s): J&M Boat Dock

Acknowledged and agreed to by:

OWNER	OWNER
CRAIG M. NIKRANT	DEBRA K NIKRANT
SIGNATURE / DATE	SIGNATURE / DATE
5/23/23	5/23/23

PLEASE RETURN THIS COMPLETED FORM TO:

Quarry Community Development District
c/o District Manager
Inframark Management Services
210 N University Drive, Suite 702
Coral Springs, FL 33071

PLEASE NOTE THAT ANY INSPECTION DONE BY THE CDD IS FOR CDD PURPOSES ONLY AND MAY NOT BE RELIED UPON BY THE HOMEOWNER FOR ANY PURPOSE.

NOTE TO STAFF: This form may contain confidential information. Please do not disclose its contents without first consulting the District Manager.

PRIVACY NOTICE: Under Florida's Public Records Law, Chapter 119, Florida Statutes, the information you submit on this form may become part of a public record. This means that, if a citizen makes a public records request, we may be required to disclose the information you submit to us. Under certain circumstances, we may only be required to disclose part of the information submitted to us. If you believe that your records may qualify for an exemption under Chapter 119, Florida Statutes, please notify the District Manager, Bob Koncar by e-mail at [illegible] or by phone at 904-626-0593

After recording, please return to:

Quarry Community Development District
Inframark Management Services
210 N University Drive, Suite 702
Coral Springs, FL 33071

VARIANCE AGREEMENT FOR INSTALLATION OF IMPROVEMENTS WITHIN CDD EASEMENT

This *Variance Agreement* for Installation of Improvements within CDD Easement ("**Agreement**") is entered into as of this 22nd day of February, 2023, by and among Craig Nikrant and Debra Nikrant (together, **"Owner"**) and the Quarry Community Development District ("**CDD**"), a local unit of special purpose government created pursuant to Chapter 190, Florida Statutes.

WITNESSETH:

WHEREAS, Owner is the owner of Lot 73, Block E, as per the plat ("**Plat**") of The Quarry Community Phase 2 recorded in Plat Book 50, Pages 50-53 et seq., of the Public Records of Collier County, Florida ("**Property**"); and

WHEREAS, Owner desires to erect certain improvements described as Floating Boat Dock & Lift Installation ("**Improvements**") within a CDD LakeMaintenance easement ("**Easement**") located 9388 Slate Ct. ("**License Area**"), as shown on the Plat; and

WHEREAS, due to the CDD's legal interests in the Easement, among other reasons, Owner requires the CDD's consent before constructing improvements within any portion of the Surface Water Management System, including the Easement; and

WHEREAS, the CDD has agreed to consent to the installation of the Improvements within the License Area, subject to the terms and conditions set forth in this Agreement.

NOW, THEREFORE, in consideration of Ten and No/100 Dollars ($10.00) and other good and valuable consideration, the receipt and sufficiency of which are hereby acknowledged, it is understood and agreed as follows:

1. **Recitals**. The recitals set forth above are acknowledged as true and correct and are incorporated herein by reference.

2. **License for Improvements Installation & Maintenance; Limitation**. Subject to the terms of this Agreement, the CDD hereby grants Owner the right, privilege, and permission to install and maintain removable Improvements on the License Area.

3. **Owner Responsibilities**. The Owner has the following responsibilities:

a. The Owner shall be fully responsible for the installation and maintenance of the Improvements.

b. The Owner shall use only licensed and insured contractors to install the Improvements. Further, the Owner shall be responsible for ensuring that the installation and maintenance of the Improvements are conducted in compliance with all applicable laws (including but not limited to building codes, set back requirements, etc.).

c. CDD, by entering into this Agreement, does not represent that CDD has authority to provide all necessary approvals for the installation of the Improvements. Instead, the Owner shall be responsible for obtaining any and all applicable permits and approvals relating to the work (including but not limited to any approvals of the Quarry Community Association, Inc. ("Association"), as well as any other necessary legal interests and approvals).

d. The Owner shall ensure that the installation and maintenance of the Improvements does not damage any property of CDD or any third party's property, and, in the event of any such damage, the Owner shall immediately repair the damage or compensate the CDD for such repairs, at the CDD's option.

e. Owner's exercise of rights hereunder shall not interfere with CDD's rights under the Easement. For example, if the Improvements include a fence, such fence shall be installed within the Easement a few inches higher than ground level, so as not to impede the flow of water, or shall otherwise be constructed so as not to impede the flow of water. Further, the Improvements shall be installed in such a manner as to not interfere with or damage any culvert pipe or utilities that may be located within the Easement. It shall be Owner's responsibility to locate and identify any such stormwater improvements and/or utilities. Further, the Owner shall pay a licensed and insured professional contractor to mark any existing improvements and/or utilities prior to installation of the Improvements.

f. Upon completion of the installation, the Improvements will be owned by the Owner. Owner shall be responsible for the maintenance and repair of any such Improvements, and agrees to maintain the Improvements in good condition.

g. Additionally, the Owner shall keep the License Area free from any materialmen's or mechanic's liens and claims or notices in respect to such liens and claims, which arise by reason of the Owner's exercise of rights under this Agreement, and the Owner shall immediately discharge any such claim or lien.

h. The Owner shall notify the CDD prior to commencing work and upon completing work, so that the CDD may inspect the License Area. Any such inspection shall not be deemed an approval by the CDD of any work, and the CDD shall retain all rights to enforce the terms of this Agreement.

4. **Removal and/or Replacement of Improvements**. The permission granted herein is given to Owner as an accommodation and is revocable at any time. Owner acknowledges the legal interest of the CDD in the Easement described above and agrees never to deny such interest or to interfere in any way with CDD's use. Owner will exercise the privilege granted herein at Owner's own risk, and agrees that Owner will never claim any damages against CDD for any injuries or damages suffered on account of the exercise of such privilege, regardless of the fault or negligence of the CDD. Owner further acknowledges that, without notice, the CDD may remove all, or any portion or portions, of the Improvements installed upon the License Area at Owner's

expense, and that the CDD is not obligated to return or re-install the Improvements to their original location and is not responsible for any damage to the Improvements, or their supporting structure as a result of the removal.

5. **Indemnification.** Owner agrees to indemnify, defend and hold harmless Collier County, the South Florida Water Management District, and the CDD as well as any officers, supervisors, staff, agents and representatives, and successors and assigns, of the foregoing, against all liability for damages and expenses resulting from, arising out of, or in any way connected with, this Agreement or the exercise of the privileges granted hereunder.

6. **Covenants Run with the Land**. This Agreement, and all rights and obligations contained herein, shall run with the land and shall be binding upon and inure to the benefit of the parties hereto and their respective heirs, successors and assigns, including, but without limitation, all subsequent owners of any portions of the property described herein and all persons claiming under them. Whenever the word "Owner" is used herein, it shall be deemed to mean the current owner of the Property and its successors and assigns.

7. **Sovereign Immunity**. Nothing in this Agreement shall be deemed as a waiver of immunity or limits of liability of the CDD beyond any statutory limited waiver of immunity or limits of liability which may have been adopted by the Florida Legislature in Section 768.28, Florida Statutes, or other statute, and nothing in this Agreement shall inure to the benefit of any third party for the purpose of allowing any claim which would otherwise be barred under the doctrine of sovereign immunity or by operation of law.

8. **Default**. A default by either party under this Agreement – including but not limited to Owner's failure to meet its obligations under Section 3 above – shall entitle the other to all remedies available at law or in equity, which may include, but not be limited to, the right of damages and/or specific performance.

9. **Attorney's Fees & Costs**. The prevailing party in any litigation to enforce the terms of this Agreement shall be entitled to reasonable attorney's fees and costs.

10. **Counterparts**. This Agreement may be executed in counterparts. Any party hereto may join into this Agreement by executing any one counterpart. All counterparts when taken together shall constitute one agreement.

[THIS SPACE INTENTIONALLY LEFT BLANK]

WITNESSES:

MIKE HOWMER

Austin Swanson

OWNER

CRAIG M. NIKRANT

Collier

Craig M Nikrant

20 March 2023

Sherri Anne French

Notary Public State of Florida
Sherri Anne French
My Commission HH 309326
Expires 9/6/2026

Sherri Anne French

[SIGNATURE PAGE TO LICENSE AGREEMENT FOR INSTALLATION OF IMPROVEMENTS]

WITNESSES:

By: _____

MIKE HOLMER
Print Name

By: _____

Austin Swanson
Print Name

OWNER

By: _____

CRAIG M. NIKRANT
Print Name

STATE OF FLORIDA)
COUNTY OF Collier)

The foregoing instrument was ~~acknowledged before~~ me this 20 day of March, 2023 by Craig M Nikrant. She/He [ ] ~~is personally~~ known to me or [ ] produced _____ as identification.

_____
NOTARY PUBLIC

Notary Public State of Florida
Sherri Anne French
My Commission HH 309326
Expires 9/6/2026

Sherri Anne French
(Print, Type or Stamp Commissioned Name of Notary Public)

[*signatures continue on following page*]

[SIGNATURE PAGE TO LICENSE AGREEMENT FOR INSTALLATION OF IMPROVEMENTS]

WITNESSES:

By:_____

_____
Print Name

By:_____

_____
Print Name

QUARRY
COMMUNITY DEVELOPMENT DISTRICT

By:_____
Chairman, Board of Supervisors

STATE OF FLORIDA)
COUNTY OF _____)

The foregoing instrument was acknowledged before me this ____ day of _____, 2021, by _____, as _____ of the Board of Supervisors of the Quarry Community Development District, on behalf of said district. She/He [ ] is personally known to me or [ ] produced _____ as identification.

_____
NOTARY PUBLIC

Justin Faircloth
(Print, Type or Stamp Commissioned Name of Notary Public)

[*End of signature pages*]

ACORD®

CERTIFICATE OF LIABILITY INSURANCE

DATE (MM/DD/YYYY): 3/20/2023

THIS CERTIFICATE IS ISSUED AS A MATTER OF INFORMATION ONLY AND CONFERS NO RIGHTS UPON THE CERTIFICATE HOLDER. THIS CERTIFICATE DOES NOT AFFIRMATIVELY OR NEGATIVELY AMEND, EXTEND OR ALTER THE COVERAGE AFFORDED BY THE POLICIES BELOW. THIS CERTIFICATE OF INSURANCE DOES NOT CONSTITUTE A CONTRACT BETWEEN THE ISSUING INSURER(S), AUTHORIZED REPRESENTATIVE OR PRODUCER, AND THE CERTIFICATE HOLDER.

IMPORTANT: If the certificate holder is an ADDITIONAL INSURED, the policy(ies) must have ADDITIONAL INSURED provisions or be endorsed. If SUBROGATION IS WAIVED, subject to the terms and conditions of the policy, certain policies may require an endorsement. A statement on this certificate does not confer rights to the certificate holder in lieu of such endorsement(s).

PRODUCER
Arthur J. Gallagher Risk Management Services, LLC
1395 Panther Lane
Suite 100
Naples FL 34109

CONTACT NAME: Kaely Maldonado
PHONE (A/C, No, Ext): 12392627171 FAX (A/C, No): 239-262-5360
E-MAIL ADDRESS: Kaely_Maldonado@ajg.com

INSURER(S) AFFORDING COVERAGE	NAIC #
INSURER A : Navigators Insurance Company	42307
INSURER B : Benchmark Insurance Company	
INSURER C :	
INSURER D :	
INSURER E :	
INSURER F :	

INSURED J&MBOAT-01
J & M Boatlift & Repair Inc.
Jeff Maroon
2496 Kirkwood Ave.
Naples FL 34112

COVERAGES **CERTIFICATE NUMBER:** 1310426951 **REVISION NUMBER:**

THIS IS TO CERTIFY THAT THE POLICIES OF INSURANCE LISTED BELOW HAVE BEEN ISSUED TO THE INSURED NAMED ABOVE FOR THE POLICY PERIOD INDICATED. NOTWITHSTANDING ANY REQUIREMENT, TERM OR CONDITION OF ANY CONTRACT OR OTHER DOCUMENT WITH RESPECT TO WHICH THIS CERTIFICATE MAY BE ISSUED OR MAY PERTAIN, THE INSURANCE AFFORDED BY THE POLICIES DESCRIBED HEREIN IS SUBJECT TO ALL THE TERMS, EXCLUSIONS AND CONDITIONS OF SUCH POLICIES. LIMITS SHOWN MAY HAVE BEEN REDUCED BY PAID CLAIMS.

INSR LTR	TYPE OF INSURANCE	ADDL INSD	SUBR WVD	POLICY NUMBER	POLICY EFF (MM/DD/YYYY)	POLICY EXP (MM/DD/YYYY)	LIMITS	
A	X COMMERCIAL GENERAL LIABILITY	Y	Y	NY23MPKZ0DNCV01	3/5/2023	3/5/2024	EACH OCCURRENCE	$ 1,000,000
	CLAIMS-MADE X OCCUR						DAMAGE TO RENTED PREMISES (Ea occurrence)	$ 50,000
							MED EXP (Any one person)	$ 5,000
							PERSONAL & ADV INJURY	$ 1,000,000
	GEN'L AGGREGATE LIMIT APPLIES PER:						GENERAL AGGREGATE	$ 2,000,000
	X POLICY PRO-JECT LOC						PRODUCTS - COMP/OP AGG	$ 1,000,000
	OTHER:							$
	AUTOMOBILE LIABILITY						COMBINED SINGLE LIMIT (Ea accident)	$
	ANY AUTO						BODILY INJURY (Per person)	$
	OWNED AUTOS ONLY / SCHEDULED AUTOS						BODILY INJURY (Per accident)	$
	HIRED AUTOS ONLY / NON-OWNED AUTOS ONLY						PROPERTY DAMAGE (Per accident)	$
								$
	UMBRELLA LIAB / OCCUR						EACH OCCURRENCE	$
	EXCESS LIAB / CLAIMS-MADE						AGGREGATE	$
	DED / RETENTION $							$
B	WORKERS COMPENSATION AND EMPLOYERS' LIABILITY		Y	MWC230011101	3/5/2023	3/5/2024	PER STATUTE X OTH-ER	Includes USL&H
	ANYPROPRIETOR/PARTNER/EXECUTIVE OFFICER/MEMBER EXCLUDED? Y / N (Mandatory in NH)	N / A					E.L. EACH ACCIDENT	$ 1,000,000
	If yes, describe under DESCRIPTION OF OPERATIONS below						E.L. DISEASE - EA EMPLOYEE	$ 1,000,000
							E.L. DISEASE - POLICY LIMIT	$ 1,000,000
A	Equipment Floater - Inland Marine			NY23MPKZ0DNCV01	3/5/2023	3/5/2024	Limit	$175,000

DESCRIPTION OF OPERATIONS / LOCATIONS / VEHICLES (ACORD 101, Additional Remarks Schedule, may be attached if more space is required)
Installs and repairs docks and boatlifts. Blanket Additional insured and Waiver of Subrogation when agreed by written contract including primary and non-contributory in regards to General Liability. Workers Compensation - Blanket Waiver of Subrogation Applies when required by written contract per form WC000313. Quarry Community Development District are noted as additional insured when agreed in written contract.

CERTIFICATE HOLDER

Quarry Community Development District
2501-A Burns Road
Palm Beach Gardens FL 33410

CANCELLATION

SHOULD ANY OF THE ABOVE DESCRIBED POLICIES BE CANCELLED BEFORE THE EXPIRATION DATE THEREOF, NOTICE WILL BE DELIVERED IN ACCORDANCE WITH THE POLICY PROVISIONS.

AUTHORIZED REPRESENTATIVE

© 1988-2015 ACORD CORPORATION. All rights reserved.

The ACORD name and logo are registered marks of ACORD

THIS ENDORSEMENT CHANGES THE POLICY. PLEASE READ IT CAREFULLY

BLANKET ADDITIONAL ASSURED / BLANKET WAIVER OF SUBROGATION

This endorsement modifies coverage provided under the following:
MARINE GENERAL LIABILITY COVERAGE POLICY - NAVG-MGL01 (Ed. 08/13)

Premium: **Included**

I. Section II - Who Is An Assured is amended to include as an additional assured any person or organization to whom the Named Assured is obligated by virtue of a written contract or agreement to provide insurance such as is afforded by this policy or who is added by endorsement, but only with respect to liability for "bodily injury", "property damage" or "personal and advertising injury" caused, in whole or in part, by your acts or omissions or the acts or omissions of those acting on your behalf:

A. In the performance of your ongoing operations; or

B. In connection with your premises owned by or rented to you.

II. The following is added to Paragraph 9. Transfer Of Rights Of Recovery Against Others To Us of Section IV - Conditions:

We waive any right of recovery we may have against the person or organization because of payments we make for injury or damage arising out of your ongoing operations or "your work" done under a contract with that person or organization and included in the "products-completed operations hazard". This waiver applies only to the person or organization for whom the Named Assured is required to waive subrogation.

This waiver of subrogation will apply only when the waiver is issued prior to an "Occurrence".

III. Coverage under this endorsement only applies if:

A. An "occurrence" and the "bodily injury" or "property damage" it causes occur; or

B. An "offense" occurs, on or after the effective date of the endorsement, but before the end of the policy period.

ALL OTHER TERMS AND CONDITIONS OF THIS POLICY REMAIN UNCHANGED.

Collier County * City of Marco * City of Naples *
City of Everglades * Contractor Licensing

MARINE SEAWALL & DOCK CONSTRUCTION

Cert Nbr:	Exp:	Issuance Nbr:
C20179	09/30/2023	20179

State Nbr: State Exp:

J & M BOAT LIFT & REPAIR, INC.
JEFFREY E. MAROON
259 BURNT PINE DR.
NAPLES, FL 34119

This Collier County Certificate of Competency's status and expiration date may change on July 1, 2023 due to the State of Florida House Bill No.735. Please visit our website at www.colliercountyfl.gov for more information as it becomes available.

Signed:

J & M Boatlift & Repair

(239) 353-7326

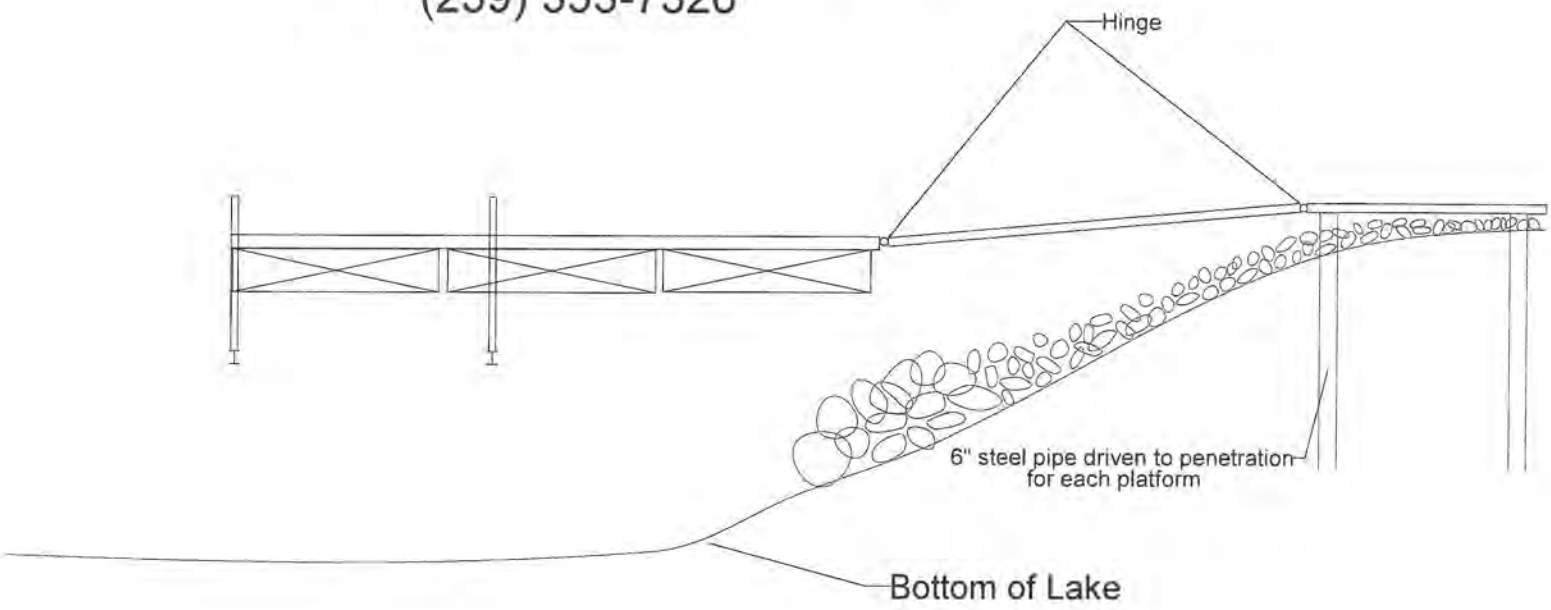

Typical side view of Floating Dock

J & M Boatlift & Repair

(239) 353-7326

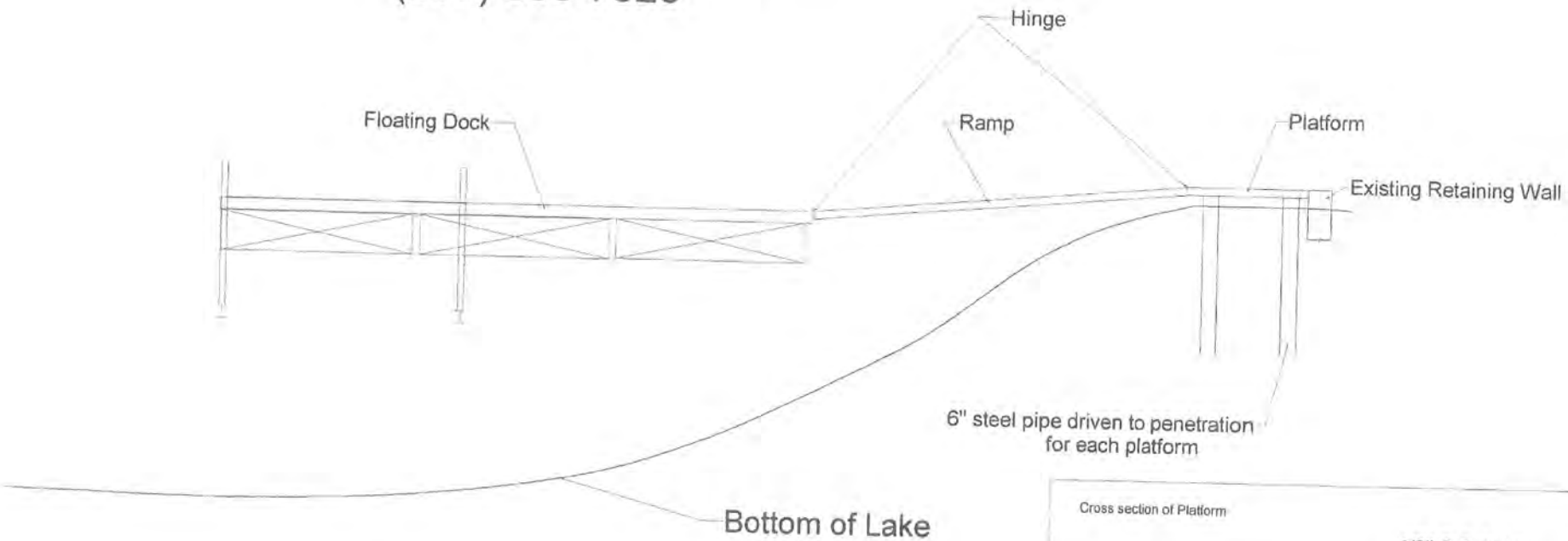

Typical side view of Floating Dock

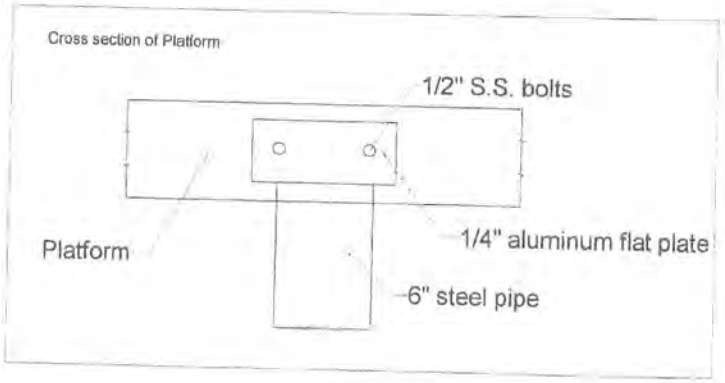

Aluminum Docks & Lifts
Typical Dock Section

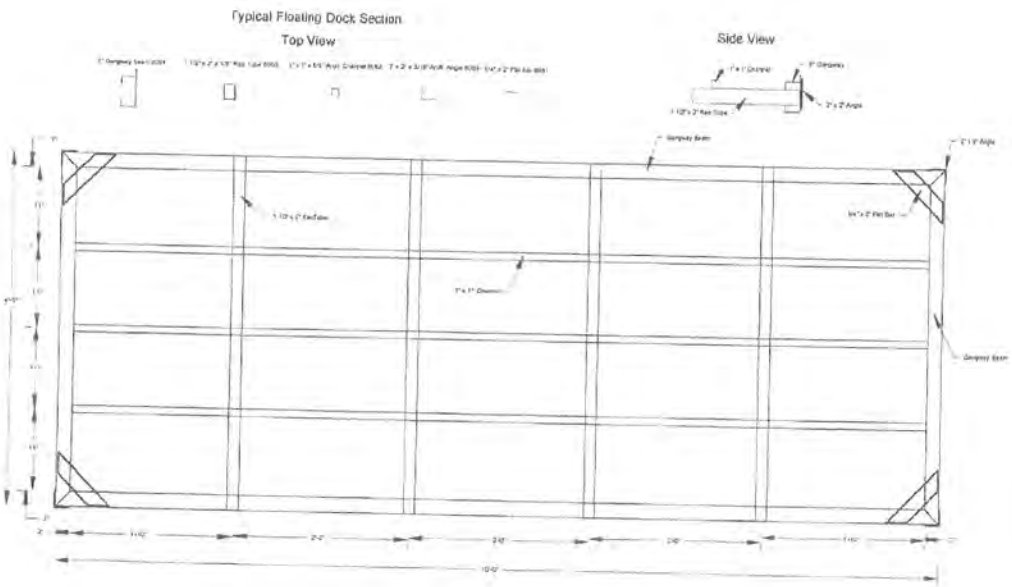

Floating dock Hardware-1/2" S.S. bolts, washers, lock washers, and nylock nuts

Decking Screws-1 1/4" S.S. phillips head screw

Floating Dock Decking- TREX/AZEK

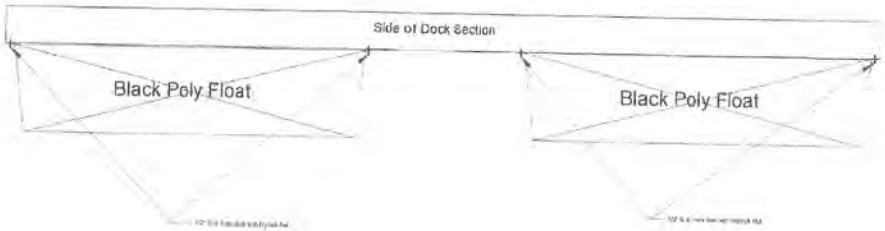

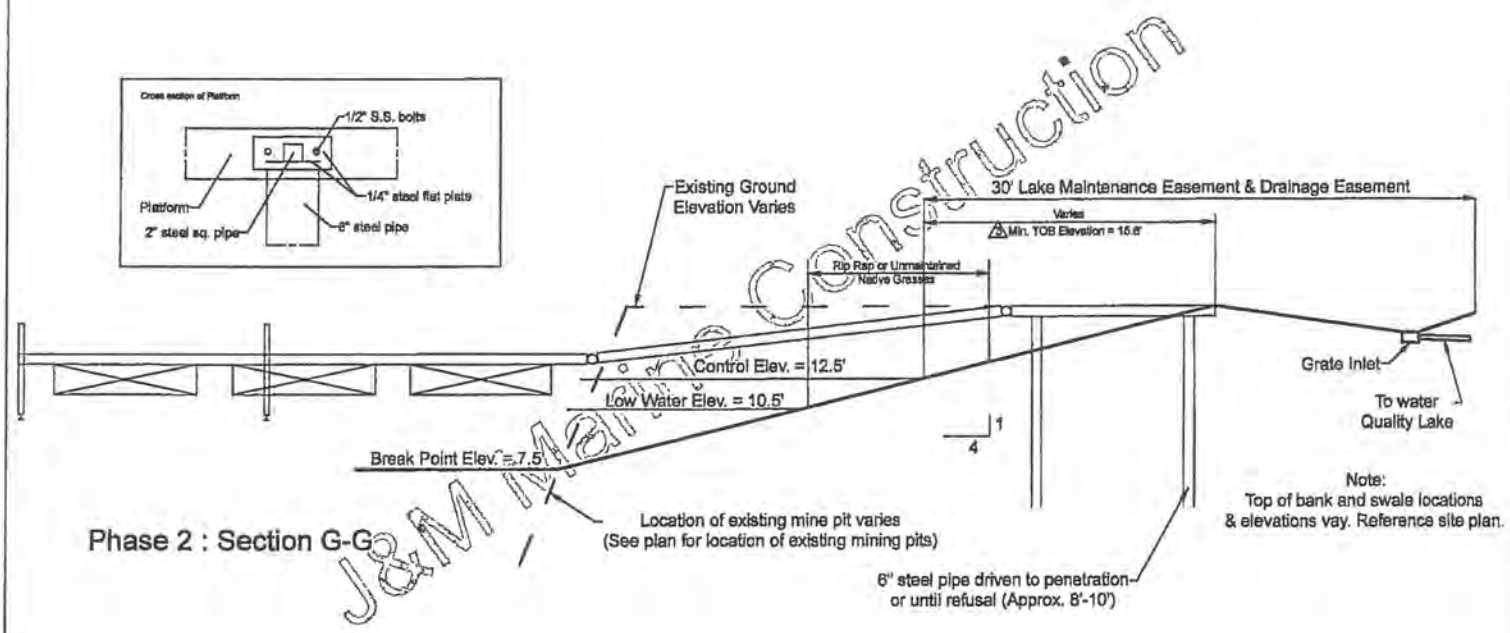

Phase 2 : Section G-G

J&M Marine Construction

J&M MARINE CONSTRUCTION

Drawing: Cross

Craig Nikrant	5/3/23	A P P R O V A L
9388 Slate Ct.	Project #642	Signature / Date

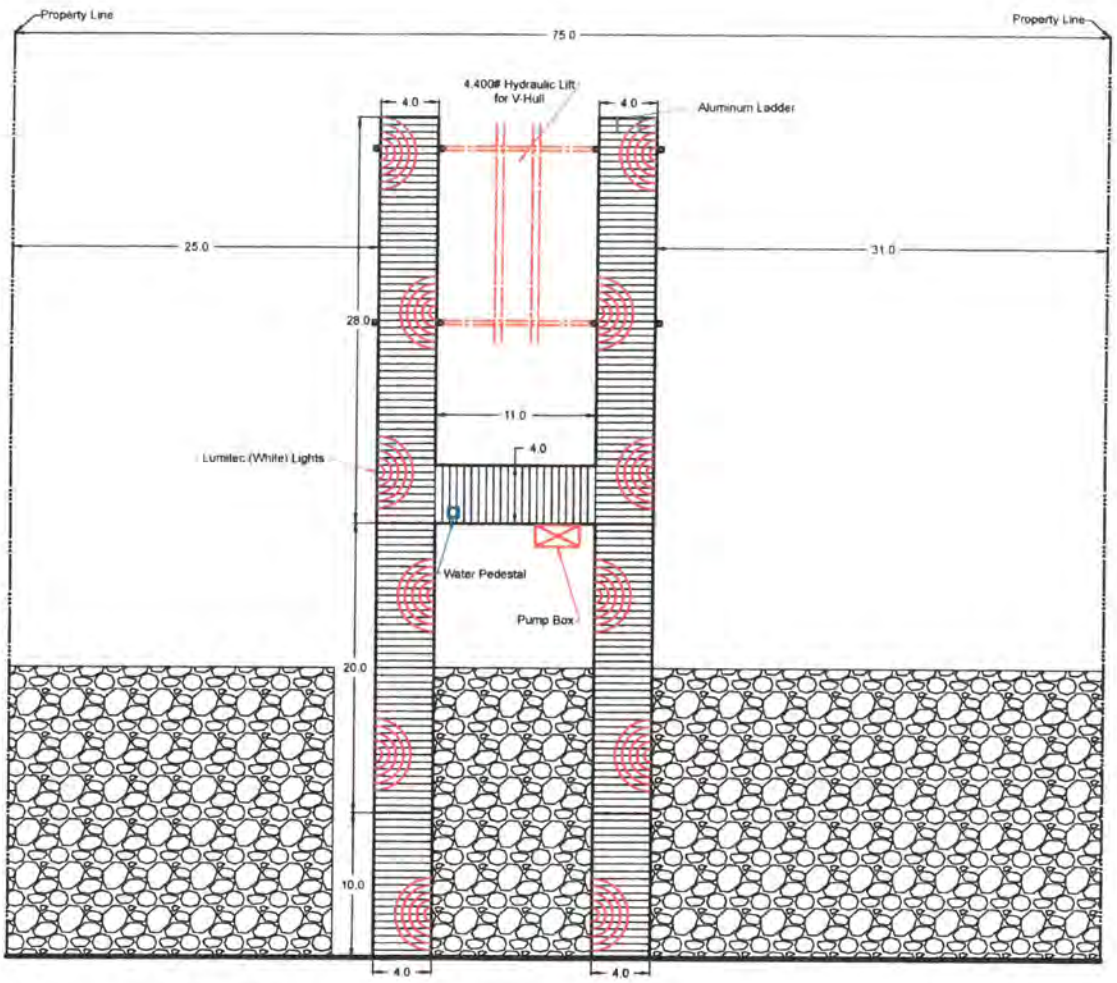

J&M
MARINE CONSTRUCTION
239-353-7326

Drawing:
2

Craig Nikrant	2/16/23	A P P R O V A L
9388 Slate Ct.	Project #642	Signature / Date

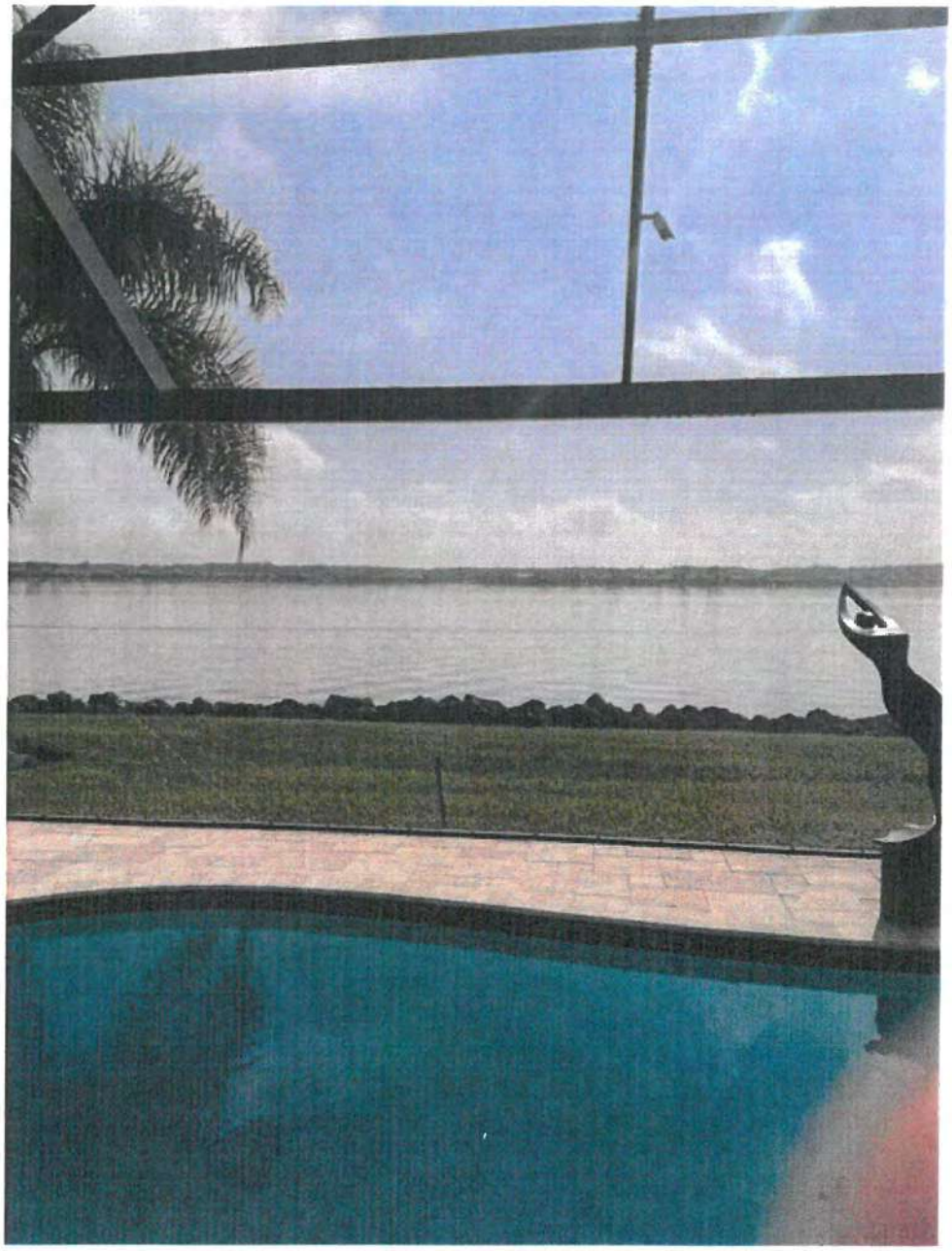

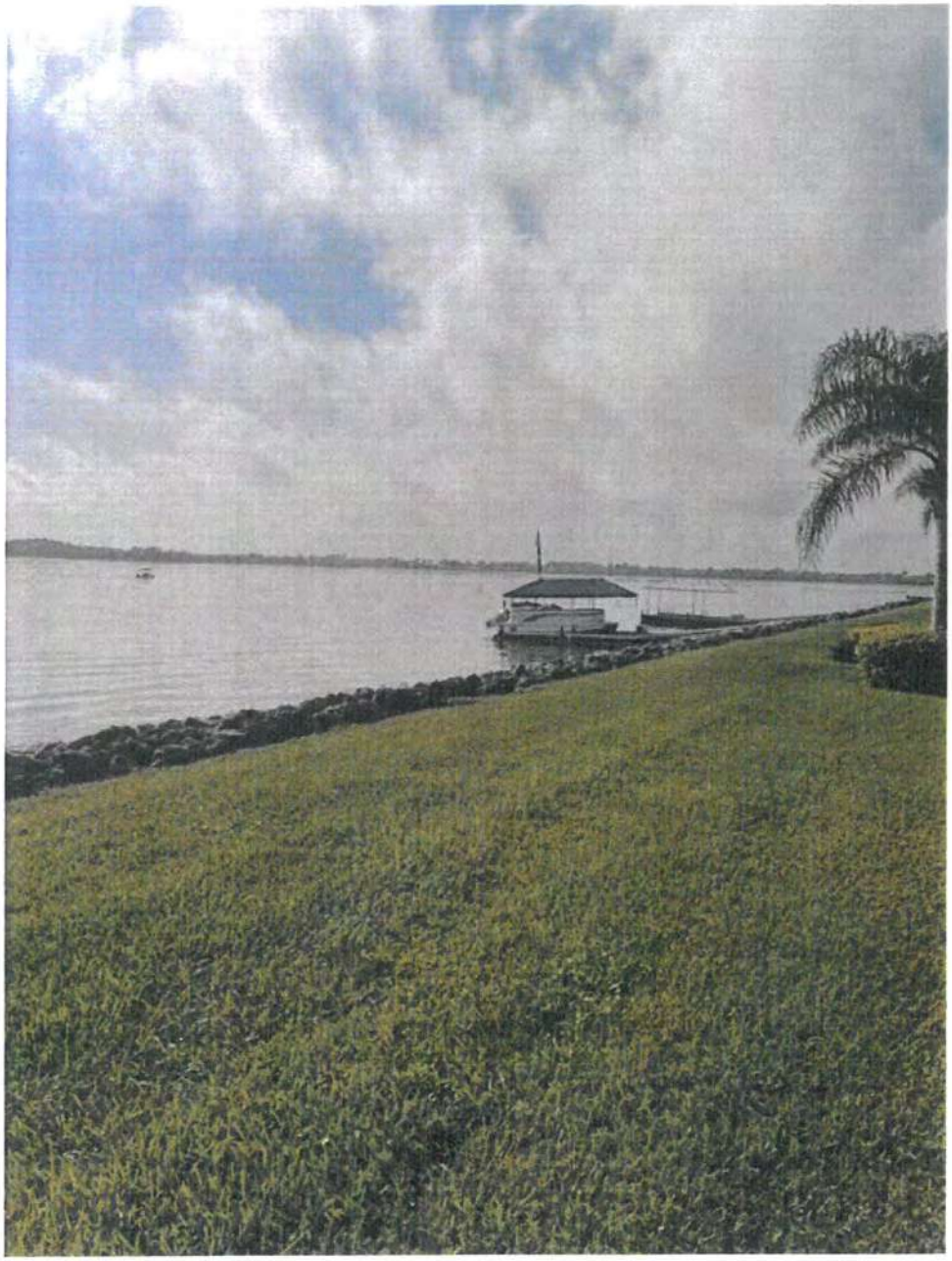

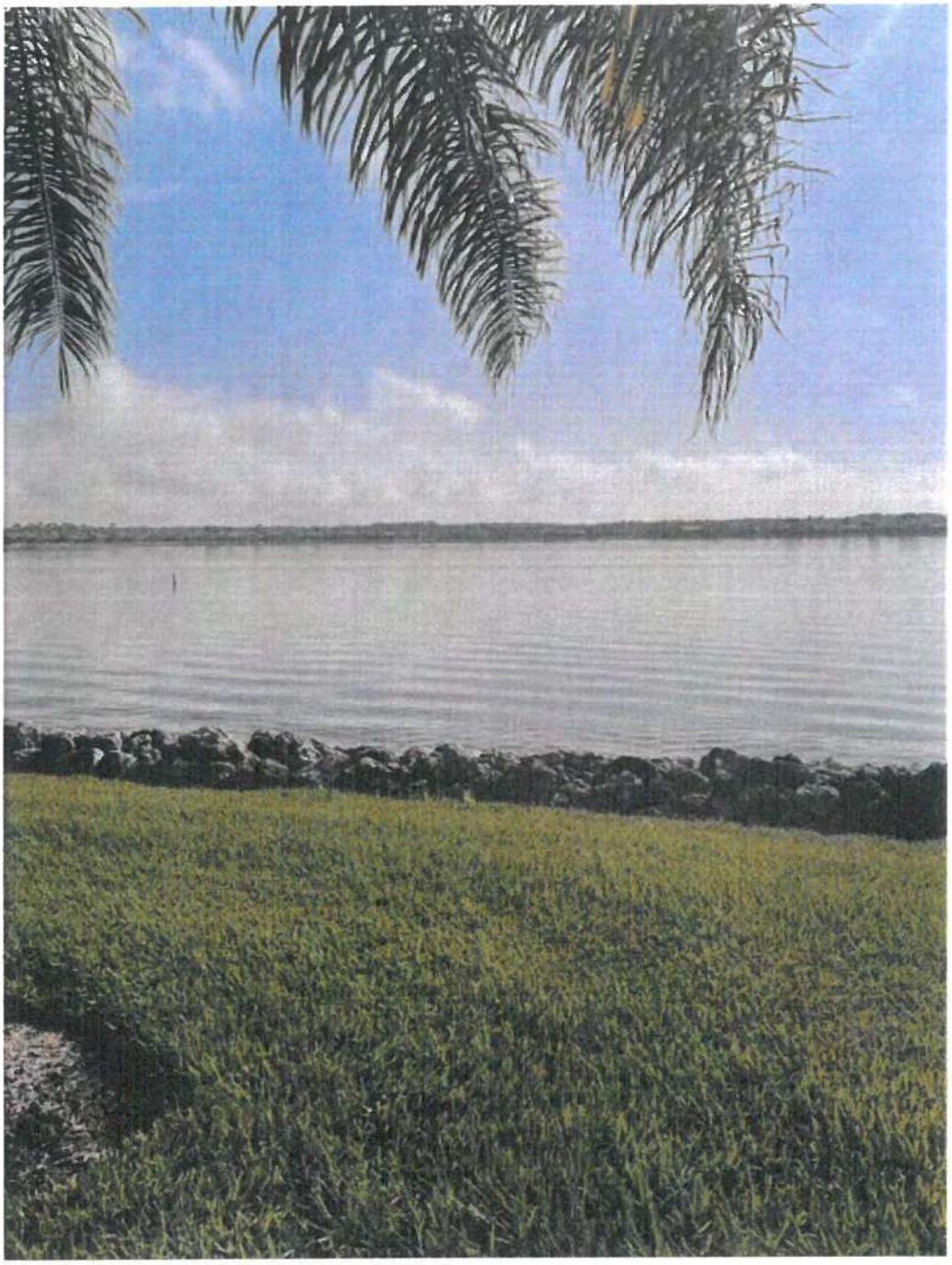

2216 Altamont Avenue
Fort Myers, Florida 33901
Phone: 239.332.5499
Fax: 239.332.2955

www.cphcorp.com

June 12, 2023

Justin Faircloth
The Quarry CDD
c/o Inframark
201 N University Dr,
Coral Springs, FL 33071.

RE: 9388 Slate Ct – Floating Dock Installation

Dear Mr. Faircloth:

CPH has reviewed the request for installation of a new floating dock improvement proposed at the above referenced address. This limited review was based on hand sketches and photos provided with the application, received on May 25, 2023, to identify any potential conflicts that may be caused by locating said improvements within the existing Quarry CDD Drainage Maintenance Easement. Based on the documentation submitted by Mr. and Mrs. Nikrant, CPH provides the following observations / recommendations:

- No work that will impede the stormwater run-off flow or alter the current drainage swale conditions will be allowed without a written authorization from the Quarry CDD Engineer of Record.
- The contractor shall use the existing drainage easements located at 9880 & 9384 Slate Court to access the property.

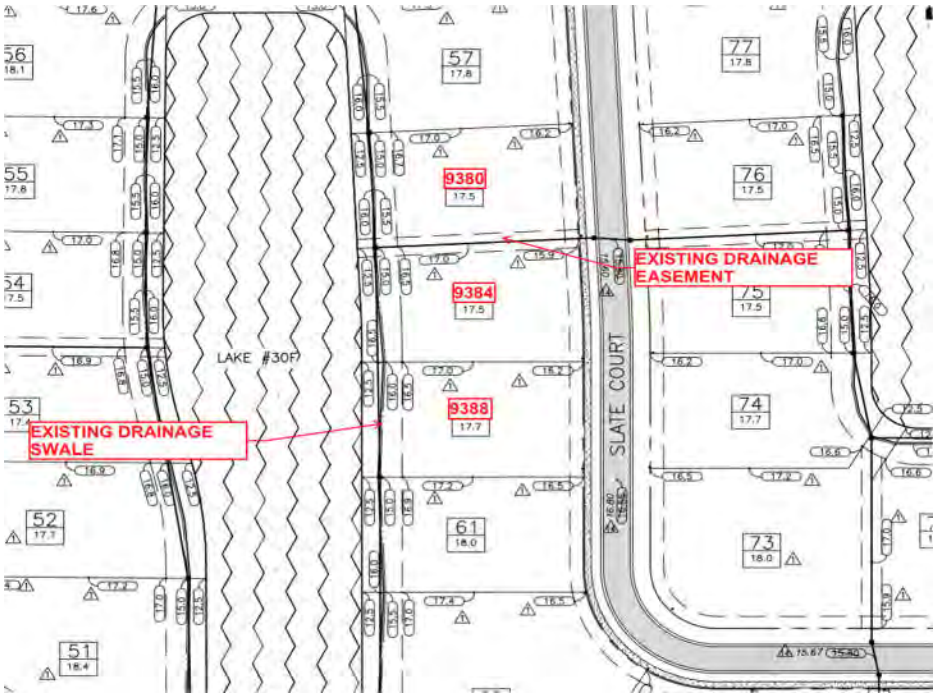

- It is the contractor's responsibility to get authorization from residents to cross any lot without a CDD drainage easement in place.

Please note that this review did not include an evaluation of the proposed design for the intended improvements, a check for compliance with Local, State, or Federal codes and/or an evaluation of the structural elements associated with the pathway / patio deck.

Please do not hesitate to contact us if there are any questions or if additional information is needed.

Sincerely,

Albert Lopez
Office Manager

Eighth Order of Business

8A

MINUTES OF MEETING
QUARRY
COMMUNITY DEVELOPMENT DISTRICT

The regular meeting of the Board of Supervisors of Quarry Community Development District was held Monday May 15, 2023 at 1:00 p.m. at the Quarry Golf Club, 8950 Weathered Stone Drive, Naples, FL 34120.

Present and constituting a quorum were:

Timothy Cantwell	Chairman
Dean Britt	Vice Chairman
Mel Stuckey	Assistant Secretary
Rick Fingeret	Assistant Secretary

Also present were:

Justin Faircloth	District Manager *(via phone)*
Jacob Whitlock	Assistant District Manager
Wes Haber	District Counsel *(via phone)*
Scott Garvin	QCA
Will Elliot	CES
Residents	

The following is a summary of the discussions and actions taken.

FIRST ORDER OF BUSINESS **Call to Order**

- Mr. Whitlock called the roll, and a quorum was established.

SECOND ORDER OF BUSINESS **Pledge of Allegiance**

- The Pledge of Allegiance was recited.

THIRD ORDER OF BUSINESS **Approval of Agenda**

- The Board added items 5C.iii Glase Golf Rip Rap 5/12/23 Email and 5.C.iv Erosion Discussion on New Construction.

> On MOTION by Mr. Britt seconded by Mr. Fingeret with all in favor, the agenda was approved as amended. 4-0

FOURTH ORDER OF BUSINESS **Public Comments on Agenda Items**

- None.

FIFTH ORDER OF BUSINESS Engineer's Report

A. Fieldstone Lane Drainage Improvement Update

> On MOTION by Mr. Stuckey seconded by Mr. Britt with all in favor, the Board authorized CPH to approve rock excavation on the Fieldstone Lane Drainage Improvement Project. (4-0)

- The District will proceed with Glase Golf as approved by Mr. Britt.
- The project is tentatively set to begin in late June.

B. Seaweed Collection Discussion

- The Board tabled this discussion due to the absence of the engineer.

C. Phase I & II Shoreline Restoration Update

i. Glase Golf Lake 47/Hole 14 Repair Proposal

> On MOTION by Mr. Fingeret seconded by Mr. Cantwell with all in favor, the Board approved the Change Order for Phase I Lake 47/Hole 14 as presented by Glase Golf in the amount of $19,325 to complete Hurricane Ian repairs. 4-0

ii. Littoral Planting Warranty Update

- The Board discussed the littoral planting warranty and Estimate 10123 from Crosscreek Environmental.
- The Board requested Mr. Faircloth notify Glase Golf that they should be responsible for the lost littorals and the expense for replanting as outlined in the contract.
- The Board requested Mr. Faircloth to have a new PO executed with Crosscreek Environmental for Phase IIB work in the amount of $15,626.44 per Estimate 10124.

iii. Glase Golf Rip Rap 5/12/23 Email

- The Board discussed the email from Glase Golf regarding the availability of rip rap and recommendation to obtain additional material from Youngquist at an increased cost.
- No decision was made on the recommendation from Glase Golf to seek rip rap material from Youngquist. This issue will be reassessed during an on-site meeting later in the week.

iv. Erosion Discussion on New construction

- The Board discussed erosion concerns regarding the Phase II project and requested a meeting be set up between Mr. Britt or Mr. Cantwell, CPH, and Glase Golf either Thursday or Friday.

D. Variance Easement Report Update

i. 9389 Copper Canyon Court Update

ii. **9337 Quarry Drive Update**
iii. **9792 Nickel Ridge Update**
iv. **9332 Granite Court Update**
v. **9262 Marble Stone Drive Update**
vi. **9179 Flint Court Update**
vii. **9388 Slate Court Update**

- The Board discussed the outstanding Variance Easement Application items.
- Mr. Faircloth provided an update on 9337 Quarry Drive noting approval for a walkway had been communicated to the QCA.
- Mr. Faircloth inquired if a separate variance easement should be recorded for new items if previous variance easements had been recorded. Mr. Haber agreed that new easements should be recorded if the Board wanted the variances to be read with a narrow interpretation. The Board agreed and Mr. Haber will develop revisions as necessary to the application.

On MOTION by Mr. Stuckey seconded by Mr. Fingeret with all in favor, to the extent the District's engineer approves of a variance easement application the Board authorized the Chair, and Vice Chair, in the absence of the Chair, to approve of such applications. 4-0

- The Board requested Mr. Faircloth to inquire with CPH about who may serve as the backup to Mr. Lopez when needed to ensure the business of the District continues seamlessly.
- The Board agreed that future variance easement approvals be sent to the County to be recorded only after the as built of the structure is confirmed to have been constructed as approved.

SIXTH ORDER OF BUSINESS New Business

A. Pesticide/Herbicide Use by the CDD

- Mr. Elliott commented on spraying in the community, and informed the Board the preserve no trespassing signs should be delivered soon, and commented that the latest Illinois Pondweed cutting was late getting started.
- Mr. Elliot noted that the second quarter preserve treatment had been completed.
- Mr. Britt commented on preserve issues.

- Mr. Cantwell commented on the District's use of herbicides and noted he responded to Ms. Kathleen Anthony regarding the District's management of the lakes and preserves as well as oversight by professional staff.

SEVENTH ORDER OF BUSINESS Old Business

A. QCA/QCDD Stormwater Rules & Guidelines Update

i. 4/26/23 Letter from Laura Severance

> On MOTION by Mr. Britt seconded by Mr. Stuckey with all in favor, changes concerning drainage application requirements and boat dock installation requirements from the May 2, 2023 email communication from Ms. Laura Severance were approved in substantial form. (4-0)

ii. QCDD and QCA Discussion Regarding Future Plans for Auditing, Cataloging, and Assessing Past Modifications Made and Potential Impact on QCDD Surface and Stormwater Management System

iii. Update and Report Regarding Dock Installation Requirements Discussed During Team Meeting with J&M Dock Builders

iv. Discuss Creation of List of Potential vendors for QCA to Provide Homeowners Requesting Voluntary Downspout Drainage Connections.

- Mr. Britt provided an update on efforts with J&M Dock Builders.
- Mr. Faircloth inquired about the status of approval of the stormwater guidelines by the QCA. Ms. Severance noted the QCA should be considering the stormwater guidelines at their June meeting.
- The Board agreed not to develop a list of vendors to provide to homeowners for drainage work.

EIGHTH ORDER OF BUSINESS District Manager' s Report

A. Approval of the April 17, 2023 Minutes

> On MOTION by Mr. Britt seconded by Mr. Cantwell with all in favor, the April 17, 2023 Minutes were approved. (4-0)

B. Acceptance of the Financial Report, and Approval of the Check Register and Invoices as of April 2023

> On MOTION by Mr. Britt seconded by Mr. Fingeret with all in favor, the Financial Report was accepted, and the Check Register and Invoices as of April 2023 were approved. (4-0)

C. Consideration of Resolution 2023-03, Approving the Fiscal Year 2024 Budget and Setting a Public Hearing

> On MOTION by Mr. Cantwell seconded by Mr. Britt with all in favor, Resolution 2023-03, Approving Proposed Budgets for Fiscal Year 2023/2024 and Setting a Public Hearing Thereon Pursuant to Florida Law, to be held Monday, August 14, 2023 at 1:00 p.m. at Quarry Golf Club, located at 8950 Weathered Stone Drive, Naples, Florida 34120, Addressing Transmittal, Posting and Publication Requirements; Addressing Severability; and Providing an Effective Date, was adopted. (4-0)

- Mr. Cantwell requested Board members be prepared at the June meeting to discuss the Budget so Inframark can make the necessary changes prior to the public hearing.

D. Report on Number of Registered Voters (1,143)

- Mr. Faircloth provided the information on the number of registered voters for the Board's information.

E. Follow-up Items

- Items previously covered in the meeting.

NINTH ORDER OF BUSINESS Attorney's Report

A. HB199 – Ethics Requirement for Officers and Employees of Special Tax Districts

- Mr. Haber covered HB199 and the impact on Supervisors regarding the upcoming need for ethics training to begin next year. Clarification should be forthcoming as the date for implementation approaches.

TENTH ORDER OF BUSINESS Supervisor Requests

- None.

ELEVENTH ORDER OF BUSINESS Audience Comments

- A resident commented on the Phase II project.
- Mr. Faircloth discussed the response received from Glase Golf regarding 9131 Crystal Court. The Board requested Mr. Faircloth to inform the homeowner of the investigation completed by the District's vendors and determine whether the homeowner had any further evidence to consider.

TWELFTH ORDER OF BUSINESS **Adjournment**

On MOTION by Mr. Britt seconded by Mr. Stuckey with all in favor the meeting was adjourned at 4:17 p.m. (4-0)

_____
Chairperson/Vice-Chairperson

8B

Quarry
Community Development District

Financial Report

October 1, 2022 - May 31, 2023

INFRAMARK
INFRASTRUCTURE MANAGEMENT SERVICES

Table of Contents

FINANCIAL STATEMENTS

Balance Sheet - All Funds ..... Page 1

Statement of Revenues, Expenditures and Changes in Fund Balance

General Fund ..... Pages 2 - 3

204-Series 2020 Debt Service Fund ..... Page 4

304-Series 2020 Capital Projects Fund ..... Page 5

Trend Report - General Fund ..... Pages 6 - 7

Notes to the Financial Statements ..... Page 8

SUPPORTING SCHEDULES

Special Assessments - Collection Schedule(s) ..... Page 9

Cash and Investment Report ..... Page 10

Bank Reconciliation ..... Page 11

Series 2020 (FEMA Project) ..... Pages 12 - 13

Payment Register by Bank Account ..... Page 14

Fiscal Year 10/1 - 9/30

Quarry
Community Development District

Financial Statements

(Unaudited)

October 1, 2022 - May 31, 2023

Balance Sheet
October 1, 2022 - May 31, 2023

ACCOUNT DESCRIPTION	GENERAL FUND	204 - SERIES 2020 DEBT SERVICE FUND	304 -SERIES 2020 CAPITAL PROJECTS FUND	TOTAL
ASSETS				
Cash - Checking Account	$ 815,613	$ -	$ -	$ 815,613
Allow -Doubtful Accounts	(8)	(27)	-	(35)
Assessments Receivable	8	27	-	35
Due From Other Gov'tl Units	250	-	-	250
Due From Other Funds	-	2,975	-	2,975
Investments:				
Money Market Account	415,473	-	-	415,473
Construction Fund	-	-	2,421,711	2,421,711
Revenue Fund	-	541,909	-	541,909
TOTAL ASSETS	**$ 1,231,336**	**$ 544,884**	**$ 2,421,711**	**$ 4,197,931**
LIABILITIES				
Accounts Payable	$ 9,298	$ -	$ -	$ 9,298
Accrued Expenses	17,662	-	-	17,662
Due To Other Funds	2,975	-	-	2,975
TOTAL LIABILITIES	**29,935**	**-**	**-**	**29,935**
FUND BALANCES				
Restricted for:				
Debt Service	-	544,884	-	544,884
Capital Projects	-	-	2,421,711	2,421,711
Assigned to:				
Operating Reserves	180,108	-	-	180,108
Reserves - Other	100,000	-	-	100,000
Unassigned:	921,293	-	-	921,293
TOTAL FUND BALANCES	**$ 1,201,401**	**$ 544,884**	**$ 2,421,711**	**$ 4,167,996**
TOTAL LIABILITIES & FUND BALANCES	**$ 1,231,336**	**$ 544,884**	**$ 2,421,711**	**$ 4,197,931**

General Fund - Operating & Maintenance Expenditures
Debt Service Fund - Series 2020 Bond
Capital Projects Fund - Construction Expenditures

Statement of Revenues, Expenditures and Changes in Fund Balances

For the Period Ending May 31, 2023

ACCOUNT DESCRIPTION	ANNUAL ADOPTED BUDGET	YEAR TO DATE ACTUAL	YTD ACTUAL AS A % OF ANNUAL ADOPTED BUD	MAY-2023 ACTUAL
REVENUES				
Interest - Investments	$ 200	$ 8,548	4274.00%	$ 1,550
Golf Course Revenue	114,918	86,189	75.00%	-
Interest - Tax Collector	-	1,313	0.00%	-
Special Assmnts- Tax Collector	814,044	808,952	99.37%	1,630
Special Assmnts- Discounts	(32,562)	(30,437)	93.47%	49
Other Miscellaneous Revenues	-	1,500	0.00%	500
TOTAL REVENUES	**896,600**	**876,065**	**97.71%**	**3,729**
EXPENDITURES				
Administration				
P/R-Board of Supervisors	12,000	7,600	63.33%	800
FICA Taxes	918	581	63.29%	61
ProfServ-Arbitrage Rebate	600	-	0.00%	-
ProfServ-Engineering	45,000	34,878	77.51%	5,846
ProfServ-Legal Services	21,000	18,325	87.26%	1,959
ProfServ-Legal Litigation	25,000	2,813	11.25%	-
ProfServ-Mgmt Consulting	60,471	40,314	66.67%	5,039
ProfServ-Property Appraiser	34,294	5,369	15.66%	-
ProfServ-Trustee Fees	4,041	4,041	100.00%	-
Auditing Services	4,900	-	0.00%	-
Website Compliance	1,553	1,164	74.95%	-
Postage and Freight	600	609	101.50%	61
Insurance - General Liability	6,246	6,682	106.98%	-
Printing and Binding	499	537	107.62%	114
Legal Advertising	4,000	487	12.18%	-
Miscellaneous Services	2,000	201	10.05%	-
Misc-Bank Charges	500	207	41.40%	-
Misc-Special Projects	20,286	3,025	14.91%	1,225
Misc-Assessment Collection Cost	16,281	15,570	95.63%	34
Misc-Contingency	1,000	-	0.00%	-
Office Supplies	250	60	24.00%	15
Annual District Filing Fee	175	175	100.00%	-
Total Administration	261,614	142,638	54.52%	15,154

Statement of Revenues, Expenditures and Changes in Fund Balances

For the Period Ending May 31, 2023

ACCOUNT DESCRIPTION	ANNUAL ADOPTED BUDGET	YEAR TO DATE ACTUAL	YTD ACTUAL AS A % OF ANNUAL ADOPTED BUD	MAY-2023 ACTUAL
Field				
ProfServ-Field Management	5,150	3,433	66.66%	429
Contracts-Preserve Maintenance	103,832	51,915	50.00%	-
Contracts - Lake Maintenance	65,004	43,336	66.67%	5,417
R&M-General	70,000	1,600	2.29%	-
R&M-Lake	154,930	31,118	20.09%	-
R&M-Weed Harvesting	75,000	31,685	42.25%	-
Miscellaneous Maintenance	6,170	-	0.00%	-
Water Quality Testing	29,900	18,664	62.42%	1,493
Capital Projects	75,000	-	0.00%	-
Total Field	584,986	181,751	31.07%	7,339
Reserves				
Reserve - Other	50,000	-	0.00%	-
Total Reserves	50,000	-	0.00%	-
TOTAL EXPENDITURES & RESERVES	**896,600**	**324,389**	**36.18%**	**22,493**
Excess (deficiency) of revenues Over (under) expenditures	-	551,676	0.00%	(18,764)
Net change in fund balance	$ -	$ 551,676	0.00%	$ (18,764)
FUND BALANCE, BEGINNING (OCT 1, 2022)	**649,725**	**649,725**		
FUND BALANCE, ENDING	**$ 649,725**	**$ 1,201,401**		

Statement of Revenues, Expenditures and Changes in Fund Balances

For the Period Ending May 31, 2023

ACCOUNT DESCRIPTION	ANNUAL ADOPTED BUDGET	YEAR TO DATE ACTUAL	YTD ACTUAL AS A % OF ANNUAL ADOPTED BUD	MAY-2023 ACTUAL
REVENUES				
Interest - Investments	$ -	$ 34	0.00%	$ 7
Special Assmnts- Tax Collector	1,472,226	1,463,016	99.37%	2,947
Special Assmnts- Discounts	(58,889)	(55,046)	93.47%	88
TOTAL REVENUES	**1,413,337**	**1,408,004**	**99.62%**	**3,042**
EXPENDITURES				
Administration				
Misc-Assessment Collection Cost	29,445	28,159	95.63%	61
Total Administration	29,445	28,159	95.63%	61
Debt Service				
Principal Debt Retirement	1,086,000	1,086,000	100.00%	1,086,000
Interest Expense	285,316	285,316	100.00%	142,658
Total Debt Service	1,371,316	1,371,316	100.00%	1,228,658
TOTAL EXPENDITURES	**1,400,761**	**1,399,475**	**99.91%**	**1,228,719**
Excess (deficiency) of revenues Over (under) expenditures	12,576	8,529	67.82%	(1,225,677)
OTHER FINANCING SOURCES (USES)				
Contribution to (Use of) Fund Balance	12,576	-	0.00%	-
TOTAL FINANCING SOURCES (USES)	**12,576**	**-**	**0.00%**	**-**
Net change in fund balance	$ 12,576	$ 8,529	67.82%	$ (1,225,677)
FUND BALANCE, BEGINNING (OCT 1, 2022)	**536,355**	**536,355**		
FUND BALANCE, ENDING	**$ 548,931**	**$ 544,884**		

Statement of Revenues, Expenditures and Changes in Fund Balances

For the Period Ending May 31, 2023

ACCOUNT DESCRIPTION	ANNUAL ADOPTED BUDGET	YEAR TO DATE ACTUAL	YTD ACTUAL AS A % OF ANNUAL ADOPTED BUD	MAY-2023 ACTUAL
REVENUES				
Interest - Investments	$ -	$ 5,490	0.00%	$ 6
TOTAL REVENUES	**-**	**5,490**	**0.00%**	**6**
EXPENDITURES				
Construction In Progress				
Construction in Progress	-	170,041	0.00%	100,585
Total Construction In Progress	-	170,041	0.00%	100,585
TOTAL EXPENDITURES	**-**	**170,041**	**0.00%**	**100,585**
Excess (deficiency) of revenues Over (under) expenditures	-	(164,551)	0.00%	(100,579)
Net change in fund balance	$ -	$ (164,551)	0.00%	$ (100,579)
FUND BALANCE, BEGINNING (OCT 1, 2022)	**-**	**2,586,262**		
FUND BALANCE, ENDING	**$ -**	**$ 2,421,711**		

Statement of Revenues, Expenditures and Changes in Fund Balances
For the Period Ending May 31, 2023

Account Description	Oct Actual	Nov Actual	Dec Actual	Jan Actual	Feb Actual	Mar Actual	Apr Actual	May Actual	Jun Projected	Jul Projected	Aug Projected	Sep Projected	TOTAL Actual Thru 5/31/2023	TOTAL Projected Next 4 Mths	TOTAL FY2023 Total	TOTAL Adopted Budget	TOTAL % of Budget
Revenues																	
Interest - Investments	$ 719	$ 707	$ 1,027	$ 1,029	$ 932	$ 1,116	$ 1,468	$ 1,550	$ 1,069	$ 1,069	$ 1,069	$ 1,069	$ 8,548	$ 4,274	$ 12,822	$ 200	6411%
Golf Course Revenue	28,730	-	-	28,730	-	-	28,730	-	-	28,730	-	-	86,189	28,730	114,919	114,918	100%
Interest - Tax Collector	-	-	-	1,151	-	-	162	-	-	-	-	-	1,313	-	1,313	-	0%
Special Assmnts- Tax Collector	3,469	215,904	516,750	22,377	16,975	12,939	18,909	1,630	5,092	-	-	-	808,952	5,092	814,044	814,044	100%
Special Assmnts- Discounts	(182)	(8,636)	(20,502)	(671)	(365)	(129)	-	49	-	-	-	-	(30,437)	-	(30,437)	(32,562)	93%
Other Miscellaneous Revenues	-	-	-	-	500	500	-	500	-	-	-	-	1,500	-	1,500	-	0%
Total Revenues	**32,736**	**207,975**	**497,275**	**52,616**	**18,042**	**14,426**	**49,269**	**3,729**	**6,161**	**29,798**	**1,069**	**1,069**	**876,065**	**38,096**	**914,161**	**896,600**	**102%**
Expenditures																	
Administrative																	
P/R-Board of Supervisors	1,000	1,000	1,000	800	1,000	1,000	1,000	800	1,000	1,000	1,000	1,000	7,600	4,000	11,600	12,000	97%
FICA Taxes	77	77	77	61	77	77	77	61	76	76	76	76	581	304	885	918	96%
ProfServ-Arbitrage Rebate	-	-	-	-	-	-	-	-	-	-	-	600	-	600	600	600	100%
ProfServ-Engineering	-	900	-	3,960	15,820	-	8,351	5,846	-	-	-	20,327	34,878	20,327	55,205	45,000	123%
ProfServ-Legal Services	(2,329)	2,329	1,728	4,294	2,549	2,836	4,960	1,959	-	-	-	-	18,325	-	18,325	21,000	87%
ProfServ-Legal Litigation	-	1,688	-	500	-	625	-	-	-	-	-	-	2,813	-	2,813	25,000	11%
ProfServ-Mgmt Consulting	5,039	10,079	-	5,039	5,039	5,039	5,039	5,039	5,039	5,039	5,039	5,039	40,314	20,157	60,471	60,471	100%
ProfServ-Property Appraiser	5,369	-	-	-	-	-	-	-	-	-	-	-	5,369	-	5,369	34,294	16%
ProfServ-Trustee Fees	-	-	-	-	4,041	-	-	-	-	-	-	-	4,041	-	4,041	4,041	100%
Auditing Services	-	-	-	-	-	-	-	-	-	5,500	-	-	-	5,500	5,500	4,900	112%
Website Compliance	388	-	-	388	-	-	388	-	-	388	-	-	1,164	388	1,552	1,553	100%
Postage and Freight	44	53	3	216	104	77	50	61	-	-	-	-	609	-	609	600	102%
Insurance - General Liability	6,682	-	-	-	-	-	-	-	-	-	-	-	6,682	-	6,682	6,246	107%
Printing and Binding	93	165	(45)	72	-	82	56	114	-	-	-	-	537	-	537	499	108%
Legal Advertising	-	-	-	-	-	487	-	-	-	-	-	-	487	-	487	4,000	12%
Miscellaneous Services	2	-	219	(19)	-	-	-	-	-	-	-	-	201	-	201	2,000	10%
Misc-Bank Charges	100	78	30	-	-	-	-	-	-	-	-	-	207	-	207	500	41%
Misc-Special Projects	-	425	100	725	-	550	-	1,225	-	-	-	-	3,025	-	3,025	20,286	15%
Misc-Assessment Collection Cost	66	4,145	9,925	434	332	256	378	34	102	-	-	-	15,570	102	15,672	16,281	96%
Misc-Contingency	-	-	-	-	-	-	-	-	-	-	-	-	-	-	-	1,000	0%
Office Supplies	-	-	-	15	-	15	15	15	-	-	-	-	60	-	60	250	24%
Annual District Filing Fee	-	175	-	-	-	-	-	-	-	-	-	-	175	-	175	175	100%
Total Administrative	16,531	21,114	13,037	16,485	28,962	11,044	20,314	15,154	6,217	12,003	6,115	27,042	142,638	51,378	194,016	261,614	74%
Field																	
ProfServ-Field Management	-	425	863	429	429	429	429	429	429	429	429	429	3,433	1,717	5,150	5,150	100%

Statement of Revenues, Expenditures and Changes in Fund Balances
For the Period Ending May 31, 2023

Account Description	Oct Actual	Nov Actual	Dec Actual	Jan Actual	Feb Actual	Mar Actual	Apr Actual	May Actual	Jun Projected	Jul Projected	Aug Projected	Sep Projected	TOTAL Actual Thru 5/31/2023	TOTAL Projected Next 4 Mths	TOTAL FY2023 Total	TOTAL Adopted Budget	TOTAL % of Budget
Contracts-Preserve Maintenance	-	25,958	-	25,958	-	-	-	-	25,958	-	-	25,958	51,915	51,915	103,830	103,832	100%
Contracts - Lake Maintenance	5,417	5,417	5,417	5,417	5,417	5,417	5,417	5,417	5,417	5,417	5,417	5,417	43,336	21,668	65,004	65,004	100%
R&M-General	-	1,600	-	-	-	-	-	-	-	-	-	80,000	1,600	80,000	81,600	70,000	117%
R&M-Lake	-	-	28,876	2,242	-	-	-	-	-	-	-	-	31,118	-	31,118	154,930	20%
R&M-Weed Harvesting	-	-	-	4,825	6,050	9,740	11,070	-	-	-	-	-	31,685	-	31,685	75,000	42%
Miscellaneous Maintenance	-	-	-	-	-	-	-	-	-	-	-	1,150	-	1,150	1,150	6,170	19%
Water Quality Testing	-	9,705	-	1,493	-	-	5,972	1,493	-	-	-	7,466	18,664	7,466	26,130	29,900	87%
Capital Projects	-	-	-	-	-	-	-	-	-	-	-	145,190	-	145,190	145,190	75,000	194%
Total Field	5,417	43,105	35,156	40,364	11,896	15,586	22,888	7,339	31,804	5,846	5,846	265,609	181,751	309,105	490,856	584,986	84%
Total Expenditures	**21,948**	**64,219**	**48,193**	**56,849**	**40,858**	**26,630**	**43,202**	**22,493**	**38,021**	**17,850**	**11,961**	**292,651**	**324,389**	**360,483**	**684,872**	**846,600**	81%
Reserves																	
Reserve - Other	-	-	-	-	-	-	-	-	-	-	-	-	-	-	-	50,000	0%
Total Reserves	-	-	-	-	-	-	-	-	-	-	-	-	-	-	-	50,000	0%
Total Expenditures & Reserves	**21,948**	**64,219**	**48,193**	**56,849**	**40,858**	**26,630**	**43,202**	**22,493**	**38,021**	**17,850**	**11,961**	**292,651**	**324,389**	**360,483**	**684,872**	**896,600**	76%
Excess (deficiency) of revenues Over (under) expenditures	10,788	143,756	449,082	(4,233)	(22,816)	(12,204)	6,067	(18,764)	(31,860)	11,948	(10,893)	(291,583)	551,676	(322,388)	229,288	-	0%
Other Financing Sources (Uses)																	
Contribution to (Use of) Fund Balance	-	-	-	-	-	-	-	-	(31,860)	11,948	(10,893)	(291,583)	-	(322,388)	(322,388)	-	0%
Total Financing Sources (Uses)	**-**	**-**	**-**	**-**	**-**	**-**	**-**	**-**	**(31,860)**	**11,948**	**(10,893)**	**(291,583)**	**-**	**(322,388)**	**(322,388)**	**-**	**0%**
Net change in fund balance	$ 10,788	$ 143,756	$ 449,082	$ (4,233)	$ (22,816)	$ (12,204)	$ 6,067	$ (18,764)	$ (31,860)	$ 11,948	$ (10,893)	$ (291,583)	$ 551,676	$ (322,388)	$ 229,288	$ -	0%
Fund Balance, Beginning (Oct 1, 2022)													**649,725**	**-**	**649,725**	**649,725**	
Fund Balance, Ending													**$ 1,201,401**	**$ (322,388)**	**$ 879,013**	**$ 649,725**	

Notes to the Financial Statements
10/1/2022 - 5/31/2023

General Fund

► **Assets**

- **Allow - Doubtful Accounts -** Collier County Tax Collector FY 2020 charge backs due to NSF checks
- **Assessments Receivable -** Collier County Tax Collector FY 2020 charge backs due to NSF checks

Budget target: 66.67%

Variance Analysis

Account Name	Annual Budget	YTD Actual	% of Budget	Explanation
Expenditures				
Administration				
ProfServ-Engineering	$45,000	$34,878	78%	CPH fees & water monitoring thru Apr 2023; Phase I & II plans/civil design
ProfServ-Legal Services	$21,000	$18,325	87%	Kutak Rock thru Mar 2023
ProfServ-Trustee Fees	$4,040	$4,041	100%	U.S. Bank trustee fees paid in full
Website Compliance	$1,553	$1,164	75%	Innersync Studio, quarterly web/compliance services
Postage and Freight	$600	$609	102%	IMS, FedEx, and Tax Collector Tax Roll postage $172
Insurance - General Liability	$6,246	$6,682	107%	EGIS Insurance FY 2023 paid in full
Printing and Binding	$499	$537	108%	IMS & FedEX to-date
Field				
Contracts-Preserve Maintenance	$103,832	$51,915	50%	Peninsula Improvement, quarterly maintenance Oct 2022 thru Mar 2023

Quarry
Community Development District

Supporting Schedules

October 1, 2022 - May 31, 2023

Non-Ad Valorem Special Assessments - Collier County Tax Collector
(Monthly Collection Distributions)
For the Fiscal Year Ending September 30, 2023

					ALLOCATION BY FUND	
Date Received	Net Amount Received	Discount / (Penalties) Amount	Collection Cost	Gross Amount Received	General Fund	Series 2020 Debt Service Fund
Assessments Levied				$ 2,286,270	$ 814,044	$ 1,472,226
Allocation %				100.00%	35.61%	64.39%
Real Estate - Installment						
10/27/22	$ 9,046	$ 511	$ 185	$ 9,742	$ 3,469	$ 6,273
12/20/22	2,612	82	53	2,747	978	1,769
01/09/23	1,982	63	40	2,085	742	1,343
04/10/23	4,736	-	97	4,832	1,721	3,112
Real Estate - Current						
11/09/22	34,381	1,462	702	36,544	13,012	23,533
11/14/22	144,366	6,138	2,946	153,450	54,637	98,813
11/21/22	391,730	16,655	7,994	416,379	148,255	268,124
12/05/22	961,045	40,860	19,613	1,021,519	363,720	657,799
12/12/22	332,130	14,063	6,778	352,971	125,678	227,293
12/20/22	70,069	2,574	1,430	74,073	26,374	47,699
01/09/23	57,759	1,823	1,179	60,760	21,634	39,126
02/06/23	45,717	1,025	933	47,675	16,975	30,700
03/06/23	35,258	363	720	36,341	12,939	23,401
04/10/23	47,307	-	965	48,273	17,188	31,085
05/11/23	4,620	(137)	94	4,576	1,629	2,947
TOTAL	$ 2,142,756	$ 85,482	$ 43,730	$ 2,271,968	$ 808,952	$ 1,463,016
% COLLECTED				99.37%	99.37%	99.37%
TOTAL OUTSTANDING				$ 14,301	$ 5,092	$ 9,209

Cash & Investment Report
October 1, 2022 - May 31, 2023

ACCOUNT NAME	BANK NAME	YIELD		BALANCE
OPERATING FUND				
Operating - Checking Account	Hancock Whitney	0.00%	$	815,613
Public Funds MMA Variance Account	BankUnited	4.50%		415,473
DEBT SERVICE AND CAPITAL PROJECT FUNDS				
Series 2020 Revenue Fund	U.S. Bank	0.01%		541,909
Series 2020 Construction Fund	U.S. Bank	0.01%		373,971
U.S. Treasury Bill Purchase 6/15/23		4.71%		499,285
U.S. Treasury Bill Purchase 7/25/23		4.93%		299,478
U.S. Treasury Bill Purchase 8/10/23		5.01%		499,302
U.S. Treasury Bill Purchase 9/21/23		4.84%		499,908
U.S. Treasury Bill Purchase 10/19/23		4.91%		249,767
				2,421,711
		Subtotal		2,963,620
		Total	**$**	**4,194,705**

Quarry CDD

Bank Reconciliation

Bank Account No.	3489	Hancock & Whitney Bank General Fund
Statement No.	05-23	
Statement Date	5/31/2023	

G/L Balance (LCY)	815,612.67	**Statement Balance**	815,612.67
G/L Balance	815,612.67	**Outstanding Deposits**	0.00
Positive Adjustments	0.00		
		Subtotal	815,612.67
Subtotal	815,612.67	**Outstanding Checks**	0.00
Negative Adjustments	0.00	**Differences**	0.00
Ending G/L Balance	815,612.67	**Ending Balance**	815,612.67
Difference	0.00		

Posting Date	Document Type	Document No.	Description	Amount	Cleared Amount	Difference

Series 2020 (FEMA Project)
Acquisition and Construction - General
FY 9/30/2023

	SOURCES OF FUNDS	TOTAL
10/1/2021	**State of Florida**	**$ 3,350,061.50**
10/26/2021	**State of Florida**	**828,145.56**
10/26/2021	**State of Florida**	**46,008.09**
11/17/2021	**State of Florida**	**94,901.34**
11/17/2021	**State of Florida**	**91,213.19**
12/21/2021	**State of Florida**	**65,276.88**
12/17/2021	FEMA check sent to U.S. Bank exceeded actual checks	-
1/10/2022	**State of Florida**	**18,585.00**
1/10/2022	**State of Florida**	**1,032.50**
	Total	**$ 4,495,224.06**
	LESS:	
11/1/2021	Debt Service - Principal Prepayment	1,351,000.00
	DEPOSIT - Acquisition and Construction - General	**$ 3,144,224.06**
	OTHER SOURCES	
11/1/2021	Transfer from Revenue Acct 4004	938.50
	Dividends FY 2022	145.89
	Dividends thru 5/31/23	5,489.46
	TOTAL SOURCES OF FUNDS	**$ 6,573.85**

USE OF FUNDS:

DATE	VENDOR REQUISITIONS	REQ #	PENDING	TOTAL
4/27/2022	CPH	1		4,940.00
4/27/2022	Kutak Rock LLP	2		988.00
5/24/2022	Midwest Construction Products Corp	3		475.00
5/16/2022	Midwest Construction Products Corp	4		3,000.00
5/16/2022	Midwest Construction Products Corp	5		7,900.00
5/24/2022	Kutak Rock LLP	6		1,776.45
5/24/2022	CPH	7		11,615.40
6/9/2022	Kutak Rock LLP	8		1,378.00
6/9/2022	Midwest Construction Products Corp	9		1,900.00
6/9/2022	Midwest Construction Products Corp	10		4,800.00
6/9/2022	Midwest Construction Products Corp	11		1,425.00
6/9/2022	Crosscreek Environmental LLC	12		2,997.66
8/1/2022	CPH	13		27,155.66
8/1/2022	CPH	14		1,800.00
8/1/2022	CPH	15		33,809.58
8/22/2022	Crosscreek Environmental LLC	16		4,000.13
8/22/2022	Midwest Construction Products Corp	17		6,000.00
8/22/2022	Midwest Construction Products Corp	18		1,020.00
8/22/2022	MJS Golf Services LLC	19		7,615.15
8/22/2022	MJS Golf Services LLC	20		4,157.51

Series 2020 (FEMA Project)
Acquisition and Construction - General
FY 9/30/2023

		SOURCES OF FUNDS		TOTAL
8/22/2022		MJS Golf Services LLC	21	12,849.68
8/22/2022		MJS Golf Services LLC	22	6,568.09
8/22/2022		MJS Golf Services LLC	23	5,058.60
8/22/2022		MJS Golf Services LLC	24	16,849.00
8/22/2022		MJS Golf Services LLC	25	49,004.13
8/22/2022		MJS Golf Services LLC	26	4,346.44
8/26/2022		CPH	27	7,745.15
9/14/2022		MJS Golf Services LLC	28	7,887.77
9/14/2022		GLASE GOLF, INC	29	319,983.78
10/20/2022		Crosscreek Environmental LLC	30	5,295.80
10/20/2022		CPH	31	6,513.38
10/20/2022		Kutak Rock LLP	32	78.00
12/2/2022		CPH	33	8,866.67
12/21/2022		CPH	34	4,500.00
1/25/2023		CPH	35	5,398.75
2/17/2023		CPH	36	1,828.75
2/17/2023		CPH	37	110.00
4/17/2023		MJS Golf Services LLC	38	17,952.64
4/17/2023		MJS Golf Services LLC	39	2,844.35
4/17/2023		MJS Golf Services LLC	40	5,715.47
4/17/2023		MJS Golf Services LLC	41	10,351.76
5/2/2023		MJS Golf Services LLC	42	4,619.04
5/2/2023		MJS Golf Services LLC	43	4,014.17
5/2/2023		CPH	44	560.60
5/2/2023		MJS Golf Services LLC	45	14,377.92
5/2/2023		MJS Golf Services LLC	46	2,876.79
5/2/2023		MJS Golf Services LLC	47	5,672.47
5/2/2023		MJS Golf Services LLC	48	14,338.68
5/3/2023		MJS Golf Services LLC	49	5,153.28
5/3/2023		Midwest Construction Products Corp	50	3,302.00
5/3/2023		Midwest Construction Products Corp	51	5,248.00
5/3/2023		Midwest Construction Products Corp	52	2,637.00
5/3/2023		CPH	53	9,283.60
5/3/2023		MJS Golf Services LLC	54	8,194.20
	*	MJS Golf Services LLC	55	-
	*	Ewing Irrigation Products, Inc	56	-
5/30/2023		MJS Golf Services LLC	57	3,993.31
5/30/2023		MJS Golf Services LLC	58	16,314.17
			Total Requisitions	729,086.98
		TOTAL CONSTRUCTION ACCOUNT BALANCE @ 5/31/23		**$ 2,421,710.93**

* Paid on 6/5/2023

QUARRY COMMUNITY DEVELOPMENT DISTRICT

Payment Register by Bank Account

For the Period from 5/1/23 to 5/31/23

(Sorted by Check / ACH No.)

Date	Payee Type	Payee	Invoice No.	Payment Description	Invoice / GL Description	G/L Account #	Amount Paid
HANCOCK & WHITNEY BANK GENERAL FUND - (ACCT#XXXXX3489)							
CHECK # 8518							
05/10/23	Vendor	INFRAMARK LLC	93675	APRIL 2023 MGMT FEES	FIELD OPS	001-531016-53901	$429.17
05/10/23	Vendor	INFRAMARK LLC	93675	APRIL 2023 MGMT FEES	COPIES	001-551002-51301	$15.00
05/10/23	Vendor	INFRAMARK LLC	93675	APRIL 2023 MGMT FEES	Printing and Binding	001-547001-51301	$56.20
05/10/23	Vendor	INFRAMARK LLC	93675	APRIL 2023 MGMT FEES	POSTAGE	001-541006-51301	$7.20
05/10/23	Vendor	INFRAMARK LLC	93675	APRIL 2023 MGMT FEES	ProfServ-Mgmt Consulting Serv	001-531027-51201	$5,039.25
						Check Total	*$5,546.82*
CHECK # 8519							
05/10/23	Vendor	COLLIER COUNTY TAX COLLECTOR	041023	2022 TAX ROLL SECOND POSTAGE BILLING	Postage and Freight	001-541006-51301	$14.20
						Check Total	*$14.20*
CHECK # 8520							
05/10/23	Vendor	PENINSULA IMPROVEMENT CORP.	INV009522	MAR 2023 LAKE & LITTORAL MAINT	Contracts - Lake Maintenance	001-534345-53901	$5,417.00
						Check Total	*$5,417.00*
CHECK # 8521							
05/10/23	Vendor	FEDEX	8-104-25584	FEDEX TO MEL STUCKEY	Postage and Freight	001-541006-51301	$41.14
						Check Total	*$41.14*
ACH #DD156							
05/17/23	Employee	TIMOTHY B. CANTWELL	PAYROLL	May 17, 2023 Payroll Posting			$184.70
						ACH Total	*$184.70*
ACH #DD157							
05/17/23	Employee	DEAN A. BRITT	PAYROLL	May 17, 2023 Payroll Posting			$184.70
						ACH Total	*$184.70*
ACH #DD158							
05/17/23	Employee	MARION M. STUCKEY	PAYROLL	May 17, 2023 Payroll Posting			$184.70
						ACH Total	*$184.70*
						Account Total	**$11,573.26**

8C

QUARRY

Community Development District

Annual Operating and Debt Service Budget

Fiscal Year 2024

Modified Tentative Budget:

(Printed on 6/6/2023 at 7:15 PM)

Prepared by:

INFRAMARK
INFRASTRUCTURE MANAGEMENT SERVICES

Table of Contents

Page #

OPERATING BUDGET

General Fund

Summary of Revenues, Expenditures and Changes in Fund Balances …….. 1-2

Budget Narrative …… 3-6

Exhibit A - Allocation of Fund Balances ……. 7

DEBT SERVICE BUDGET

Series 2020

Summary of Revenues, Expenditures and Changes in Fund Balances …….. 8

Amortization Schedule …….. 9

Budget Narrative …… 10

SUPPORTING BUDGET SCHEDULE

Comparison of Assessment Rates …….. 11

Quarry
Community Development District

Operating Budget
Fiscal Year 2024

Summary of Revenues, Expenditures and Changes in Fund Balances
Fiscal Year 2024 Modified Tentative Budget

ACCOUNT DESCRIPTION	ACTUAL FY 2021	ACTUAL FY 2022	ADOPTED BUDGET FY 2023	ACTUAL THRU MAY-2023	PROJECTED JUNE - SEPT-2023	TOTAL PROJECTED FY 2023	ANNUAL BUDGET FY 2024
REVENUES							
Interest - Investments	$ 564	$ 1,492	$ 200	$ 8,548	$ 4,274	$ 12,822	$ 4,000
Golf Course Revenue	18,000	114,918	114,918	86,189	28,729	114,918	114,945
Interest - Tax Collector	251	171	-	1,313	-	1,313	-
Special Assmnts- Tax Collector	579,501	814,044	814,044	808,952	5,092	814,044	814,044
Special Assmnts- Delinquent	821	-	-	-	-	-	-
Special Assmnts- Discounts	(21,200)	(30,440)	(32,562)	(30,437)	-	(30,437)	(32,562)
Other Miscellaneous Revenues	48,215	48,250	-	1,500	-	1,500	-
TOTAL REVENUES	**626,152**	**948,435**	**896,600**	**876,065**	**38,095**	**914,160**	**900,427**
EXPENDITURES							
Administrative							
P/R-Board of Supervisors	8,200	10,200	12,000	7,600	4,000	11,600	12,000
FICA Taxes	627	780	918	581	306	887	918
ProfServ-Arbitrage Rebate	-	-	600	-	600	600	600
ProfServ-Engineering	27,564	50,008	45,000	34,878	20,327	55,205	45,000
ProfServ-Legal Services (District)	13,835	39,166	21,000	18,325	-	18,325	21,000
ProfServ-Legal Litigation (Outside Svcs)	4,686	-	25,000	2,813	-	2,813	25,000
ProfServ-Mgmt Consulting Serv	57,000	58,710	60,471	40,314	20,157	60,471	62,285
ProfServ-Other Legal Charges	69,525	25,500	-	-	-	-	-
ProfServ-Property Appraiser	11,318	-	34,294	5,369	-	5,369	34,294
ProfServ-Trustee Fees	7,189	4,041	4,041	4,041	-	4,041	4,041
ProfServ-Consultants	11,810	-	-	-	-	-	-
Auditing Services	4,900	7,250	4,900	-	5,500	5,500	5,500
Contract-Website Hosting	362	-	-	-	-	-	-
Website Compliance	1,553	1,553	1,553	1,164	388	1,552	1,553
Postage and Freight	1,232	515	600	609	-	609	600
Insurance - General Liability	6,064	6,216	6,246	6,682	-	6,682	6,246
Printing and Binding	601	137	499	537	-	537	500
Legal Advertising	2,495	2,786	4,000	487	-	487	4,000
Miscellaneous Services	1,155	-	2,000	201	-	201	2,000
Misc-Bank Charges	443	686	500	207	-	207	500
Misc-Special Projects	19,350	9,750	20,286	3,025	-	3,025	21,547
Misc-Assessmnt Collection Cost	7,429	9,816	16,281	15,570	102	15,672	16,281
Misc-Contingency	1,591	436	1,000	-	-	-	1,000
Office Supplies	315	-	250	60	-	60	250
Annual District Filing Fee	175	175	175	175	-	175	175
Total Administrative	**259,419**	**227,725**	**261,614**	**142,638**	**51,380**	**194,018**	**265,289**
Field							
ProfServ-Field Management	-	5,295	5,150	3,433	1,717	5,150	5,304
Contracts-Preserve Maintenance	51,040	102,955	103,832	51,915	51,915	103,830	103,830
Contracts-Lake Maintenance	-	65,004	65,004	43,336	21,668	65,004	65,004
R&M-General	-	12,788	70,000	1,600	80,000	81,600	70,000
R&M-Lake	-	112,486	154,930	31,118	-	31,118	154,930
Lake & Preserve Maintenance	102,117	-	-	-	-	-	-
R&M-Fence	-	-	-	-	-	-	2,500
R&M-Weed Harvesting	-	49,345	75,000	31,685	-	31,685	75,000
Miscellaneous Maintenance	27,080	56,150	6,170	-	1,150	1,150	3,670
Water Quality Testing	-	33,633	29,900	18,664	7,466	26,130	29,900

Summary of Revenues, Expenditures and Changes in Fund Balances
Fiscal Year 2024 Modified Tentative Budget

ACCOUNT DESCRIPTION	ACTUAL FY 2021	ACTUAL FY 2022	ADOPTED BUDGET FY 2023	ACTUAL THRU MAY-2023	PROJECTED JUNE - SEPT-2023	TOTAL PROJECTED FY 2023	ANNUAL BUDGET FY 2024
Capital Projects	-	-	75,000	-	145,190	145,190	75,000
Total Field	**180,237**	**437,656**	**584,986**	**181,751**	**309,106**	**490,857**	**585,138**
Reserves							
Reserve - Other	-	-	50,000	-	-	-	50,000
Total Reserves	**-**	**-**	**50,000**	**-**	**-**	**-**	**50,000**
TOTAL EXPENDITURES & RESERVES	**439,656**	**665,381**	**896,600**	**324,389**	**360,486**	**684,875**	**900,427**
Excess (deficiency) of revenues Over (under) expenditures	186,496	283,054	-	551,676	(322,391)	229,285	-
OTHER FINANCING SOURCES (USES)							
Operating Transfers-Out	-	-	-	-	-	-	-
TOTAL OTHER SOURCES (USES)	**-**	**-**	**-**	**-**	**-**	**-**	**-**
Net change in fund balance	186,496	283,054	-	551,676	(322,391)	229,285	-
FUND BALANCE, BEGINNING	180,176	366,672	649,726	649,726	-	649,726	879,011
FUND BALANCE, ENDING	**$ 366,672**	**$ 649,726**	**$ 649,726**	**$ 1,201,402**	**$ (322,391)**	**$ 879,011**	**$ 879,011**

Budget Narrative
Fiscal Year 2024

REVENUES

Interest-Investments

The District earns interest on the monthly average collected balance for their money market account.

Golf Course Revenue

The District receives yearly revenue from golf course.

Special Assessments-Tax Collector

The District will levy a Non-Ad Valorem assessment on all the assessable property within the District to pay for the operating expenditures during the Fiscal Year.

Special Assessments-Discounts

Per Section 197.162, Florida Statutes, discounts are allowed for early payment of assessments. The budgeted amount for the fiscal year is calculated at 4% of the anticipated Non-Ad Valorem assessments.

EXPENDITURES

Administrative

P/R-Board of Supervisors

Chapter 190 of the Florida Statutes allows for members of the Board of Supervisors to be compensated $200 per meeting at which they are in attendance. The amount for the Fiscal Year is based upon all supervisors attending all twelve meetings.

FICA Taxes

Payroll taxes on Board of Supervisors compensation. The budgeted amount for the fiscal year is calculated at 7.65% of the total Board of Supervisor's payroll expenditures.

Professional Services-Arbitrage Rebate Calculation

The District utilizes a company who specializes in calculating the District's Arbitrage Rebate Liability on the Series of Benefit Special Assessment Bonds. The budgeted amount for the fiscal year is based on standard fees charged for this service.

Professional Services-Engineering

The District's engineer provides general engineering services to the District, i.e., attendance and preparation for monthly board meetings when requested, review of invoices, annual engineer report for compliance purpose and other specifically requested assignments. Annual engineer's report as required by the bond indenture.

Professional Services-Legal Services (District)

The District's Attorney, Kutak Rock, LLP. provides general legal services to the District, i.e., attendance and preparation for monthly Board meetings, review of contracts, review of agreements and resolutions, and other research as directed or requested by the Board of Supervisors and the District Manager.

Professional Services-Legal Litigation (Outside Services)

Allowance for outside legal services as needed.

Budget Narrative
Fiscal Year 2024

EXPENDITURES

Administrative (continued)

Professional Services-Management Consulting Services

The District receives management, accounting, and administrative services as part of a management agreement with Inframark Infrastructure Management Services. Also includes cost of Information Technology (GASB 54 Compliant Software System), transcription services, records management, and long-term offsite records storage. The budgeted amount for the fiscal year is based on the contracted fees outlined in Exhibit "A" of the management agreement.

Professional Services-Property Appraiser

Collier County Non-Ad Valorem Tax roll. 1.5% of current fiscal year total assessments less prior year excess fees and/or adjustments.

Professional Services-Trustee

The District issued this Series 2020 Special Assessment Bond that is deposited to Trustee to manage all trustee matters. The annual trustee fee is based on standard fees charged plus any out-of-pocket expenses.

Auditing Services

The District is required to conduct an annual audit of its financial records by an Independent Certified Public Accounting Firm. The budgeted amount for the fiscal year is based on contracted fees from an existing engagement letter.

Website Compliance

The District contracted with a company to operate the website ADA compliance to meet Florida statutes.

Postage and Freight

Actual postage and/or freight used for District mailings including agenda packages, vendor checks and other correspondence.

Insurance-General Liability

The District's General Liability & Public Officials Liability Insurance policy is with Florida Insurance Alliance. They specialize in providing insurance coverage to governmental agencies. The budgeted amount allows for a projected increase in the premium. A 3% increase is projected.

Printing and Binding

Copies used in the preparation of agenda packages, required mailings, and other special projects.

Legal Advertising

The District is required to advertise various notices for monthly Board meetings and other public hearings in a newspaper of general circulation.

Miscellaneous Services

The District may incur other unanticipated services. (Email migration, main renewal, and new email accounts)

Misc-Bank Charges

The District may incur unanticipated bank fees.

Misc-Special Projects

The District special projects during the year.

Budget Narrative
Fiscal Year 2024

EXPENDITURES

Administrative (continued)

Miscellaneous-Assessment Collection Costs
The District reimburses the Collier County Tax Collector for necessary administrative costs. Per the Florida Statutes, administrative costs shall include, but not be limited to, those costs associated with personnel, forms, supplies, data processing, computer equipment, postage, and programming. The District also compensates the Tax Collector for the actual cost of collection or 2% on the amount of special assessments collected and remitted, whichever is greater. The budget for collection costs was based on a maximum of 2% of the anticipated assessment collections**.**

Misc-Contingency
The District may incur unbudgeted expenditures.

Office Supplies
Supplies used in the preparation and binding of agenda packages, required mailings, and other special projects.

Annual District Filing Fee
The District annual fee of $175 to the Department of Economic Opportunity.

Field

Professional Services-Field Management
The District contract for field management services.

Contracts-Preserve Maintenance
Quarterly preserve contract with Collier Environmental Services, A/K/A Peninsula Improvement Corporation.

Contracts-Lake Maintenance
Monthly service for $5,417 for lake and littoral maintenance with Collier Environmental Services, A/K/A Peninsula Improvement Corporation.

R&M-Weed Harvesting
Lake weed works for the District.

R&M-General
General expenditures that may incur for the District.

R&M-Lake
Other lake expenditures that may incur for the District.

Miscellaneous Maintenance
District other maintenance.

Water Quality Testing
Water quality testing for the District, as needed.

Capital Projects
The District purchase of capital expenditures.

Budget Narrative
Fiscal Year 2024

EXPENDITURES

Reserves

Reserve - Other
Planned expenditures the District allocated for future projects

Exhibit "A"

Allocation of Fund Balances

AVAILABLE FUNDS

		Amount
Beginning Fund Balance - Fiscal Year 2024	$	879,011
Net Change in Fund Balance - Fiscal Year 2024		-
Reserves - Fiscal Year 2024 Additions		50,000
Total Funds Available (Estimated) - 9/30/2024		**929,011**

ALLOCATION OF AVAILABLE FUNDS

Assigned Fund Balance			
Operating Reserve - First Quarter Operating Capital		175,439	(1)
Reserves - Other (Previous Years)		150,000	
Reserves - Other (FY 2024)		50,000	
	Subtotal	200,000	
Total Allocation of Available Funds		**375,439**	
Total Unassigned (undesignated) Cash	**$**	**553,572**	

Notes

(1) Represents approximately 3 months of operating expenditures

Quarry
Community Development District

Debt Service Budget
Fiscal Year 2024

Summary of Revenues, Expenditures and Changes in Fund Balances
Fiscal Year 2024 Modified Tentative Budget

ACCOUNT DESCRIPTION	ACTUAL FY 2021	ACTUAL FY 2022	ADOPTED BUDGET FY 2023	ACTUAL THRU MAY-2023	PROJECTED JUNE - SEPT-2023	TOTAL PROJECTED FY 2023	ANNUAL BUDGET FY 2024
REVENUES							
Interest - Investments	$ 27	$ 40	$ -	$ 34	$ -	$ 34	$ -
Special Assmnts- Tax Collector	250,997	1,608,706	1,472,226	1,463,016	9,210	1,472,226	1,472,226
Special Assmnts- Delinquent	2,913	-	-	-	-	-	-
Special Assmnts- Discounts	(3,493)	(60,155)	(58,889)	(55,046)	-	(55,046)	(58,889)
TOTAL REVENUES	**250,444**	**1,548,591**	**1,413,337**	**1,408,004**	**9,210**	**1,417,214**	**1,413,337**
EXPENDITURES							
Administrative							
Misc-Assessmnt Collection Cost	(7,423)	19,399	29,445	28,159	184	28,343	29,445
Total Administrative	**(7,423)**	**19,399**	**29,445**	**28,159**	**184**	**28,343**	**29,445**
Debt Service							
Principal Debt Retirement	987,000	1,065,000	1,086,000	1,086,000	-	1,086,000	1,107,000
Interest Expense	126,871	319,082	285,316	285,316	-	285,316	264,248
Cost of Issuance	274,006	-	-	-	-	-	-
Total Debt Service	**1,387,877**	**1,384,082**	**1,371,316**	**1,371,316**	**-**	**1,371,316**	**1,371,248**
TOTAL EXPENDITURES	**1,380,454**	**1,403,481**	**1,400,761**	**1,399,475**	**184**	**1,399,659**	**1,400,693**
Excess (deficiency) of revenues Over (under) expenditures	(1,130,010)	145,110	12,576	8,529	9,026	17,555	12,644
OTHER FINANCING SOURCES (USES)							
Interfund Transfer - In	1,244,820	-	-	-	-	-	-
Proceeds of Refunding Bonds	277,373	-	-	-	-	-	-
Operating Transfers-Out	-	(939)	-	-	-	-	-
Contribution to (Use of) Fund Balance	-	-	12,576	-	-	-	-
TOTAL OTHER SOURCES (USES)	**1,522,193**	**(939)**	**12,576**	**-**	**-**	**-**	**-**
Net change in fund balance	392,183	144,171	12,576	8,529	9,026	17,555	-
FUND BALANCE, BEGINNING	-	392,183	536,354	536,354	-	536,354	553,909
FUND BALANCE, ENDING	**$ 392,183**	**$ 536,354**	**$ 548,930**	**$ 544,883**	**$ 9,026**	**$ 553,909**	**$ 553,909**

BOND DEBT SERVICE

Quarry Community Development District
Special Assessment Refunding Bonds, Series 2020
Refunding of Special Assessment Refunding Bonds, Series 2019
(Private Placement - Hancock Bank)

Period Ending	Par Outstanding	Principal	Extraordinary Redemption	Coupon	Interest	Debt Service	Annual Debt Service
11/1/2023	13,621,000				132,124	132,123.70	
5/1/2024	13,621,000	1,107,000		1.940%	132,124	1,239,123.70	1,371,247.40
11/1/2024	12,514,000				121,386	121,385.80	
5/1/2025	12,514,000	1,128,000		1.940%	121,386	1,249,385.80	1,370,771.60
11/1/2025	11,386,000				110,444	110,444.20	
5/1/2026	11,386,000	1,151,000		1.940%	110,444	1,261,444.20	1,371,888.40
11/1/2026	10,235,000				99,280	99,279.50	
5/1/2027	10,235,000	1,173,000		1.940%	99,280	1,272,279.50	1,371,559.00
11/1/2027	9,062,000				87,901	87,901.40	
5/1/2028	9,062,000	1,196,000		1.940%	87,901	1,283,901.40	1,371,802.80
11/1/2028	7,866,000				76,300	76,300.20	
5/1/2029	7,866,000	1,220,000		1.940%	76,300	1,296,300.20	1,372,600.40
11/1/2029	6,646,000				64,466	64,466.20	
5/1/2030	6,646,000	952,000		1.940%	64,466	1,016,466.20	1,080,932.40
11/1/2030	5,694,000				55,232	55,231.80	
5/1/2031	5,694,000	970,000		1.940%	55,232	1,025,231.80	1,080,463.60
11/1/2031	4,724,000				45,823	45,822.80	
5/1/2032	4,724,000	990,000		1.940%	45,823	1,035,822.80	1,081,645.60
11/1/2032	3,734,000				36,220	36,219.80	
5/1/2033	3,734,000	1,009,000		1.940%	36,220	1,045,219.80	1,081,439.60
11/1/2033	2,725,000				26,433	26,432.50	
5/1/2034	2,725,000	891,000		1.940%	26,433	917,432.50	943,865.00
11/1/2034	1,834,000				17,790	17,789.80	
5/1/2035	1,834,000	908,000		1.940%	17,790	925,789.80	943,579.60
11/1/2035	926,000				8,982	8,982.20	
5/1/2036	926,000	926,000		1.940%	8,982	934,982.20	943,964.40
		$ 13,621,000			$ 1,764,760	$ 15,385,760	$ 15,385,760

Budget Narrative
Fiscal Year 2024

REVENUES

Special Assessments-Tax Collector

The District will levy a Non-Ad Valorem assessment on all the assessable property within the District to pay for the debt service expenditures during the Fiscal Year.

Special Assessments-Discounts

Per Section 197.162, Florida Statues, discounts are allowed for early payment of assessments. The budgeted amount for the fiscal year is calculated at 4% of the anticipated Non-Ad Valorem assessments.

EXPENDITURES

Administrative

Miscellaneous-Assessment Collection Cost

The District reimburses the Collier County Tax Collector for her or his necessary administrative costs. Per the Florida Statutes, administrative costs shall include, but not be limited to, those costs associated with personnel, forms, supplies, data processing, computer equipment, postage, and programming. The District also compensates the Tax Collector for the actual cost of collection or 2% on the amount of special assessments collected and remitted, whichever is greater. The budget for collection costs was based on a maximum of 2% of the anticipated assessment collections.

Principal Debt Retirement

The District pays an annual principal amount on 5/1 of each fiscal year.

Interest Expense

The District pays semi-annual interest amounts on 5/1 and 11/1 of each fiscal year.

Quarry
Community Development District

Supporting Budget Schedule
Fiscal Year 2024

Comparison of Assessment Rates
Fiscal Year 2024 vs. Fiscal Year 2023

	General Fund 001			2020-1 Debt Service			2020-2 Debt Service			2020-3 Debt Service			Total Assessments per Unit			
Product & Phase	**FY 2024**	**FY 2023**	**% Change**	**FY 2024**	**FY 2023**	**% Change**	**FY 2024**	**FY 2023**	**% Change**	**FY 2024**	**FY 2023**	**% Change**	**FY 2024**	**FY 2023**	**% Change**	**Units**
Coach	$763.83	$763.86	0.0%	$1,225.84	$1,225.84	0.0%	$94.38	$94.38	0.0%	$198.20	$198.20	0.0%	$2,282.25	$2,282.29	0.0%	26
	$763.83	$763.86	0.0%	$1,265.38	$1,265.38	0.0%	$94.38	$94.38	0.0%	$198.20	$198.20	0.0%	$2,321.79	$2,321.82	0.0%	19
	$763.83	$763.86	0.0%	$1,463.09	$1,463.09	0.0%	$94.38	$94.38	0.0%	$198.20	$198.20	0.0%	$2,519.50	$2,519.54	0.0%	3
	$763.83	$763.86	0.0%	$1,660.81	$1,660.81	0.0%	$94.38	$94.38	0.0%	$198.20	$198.20	0.0%	$2,717.22	$2,717.25	0.0%	37
	$763.83	$763.86	0.0%	$1,700.35	$1,700.35	0.0%	$94.38	$94.38	0.0%	$198.20	$198.20	0.0%	$2,756.76	$2,756.80	0.0%	1
	$763.83	$763.86	0.0%	$1,858.52	$1,858.52	0.0%	$94.38	$94.38	0.0%	$198.20	$198.20	0.0%	$2,914.93	$2,914.97	0.0%	30
	$763.83	$763.86	0.0%	$506.15	$506.15	0.0%	$94.38	$94.38	0.0%	$198.20	$198.20	0.0%	$1,562.56	$1,562.59	0.0%	96
Luxury Coach	$856.39	$856.40	0.0%	$1,384.01	$1,384.01	0.0%	$111.88	$111.88	0.0%	$234.89	$234.89	0.0%	$2,587.16	$2,587.17	0.0%	26
	$856.39	$856.40	0.0%	$1,502.64	$1,502.64	0.0%	$111.88	$111.88	0.0%	$234.89	$234.89	0.0%	$2,705.79	$2,705.80	0.0%	20
	$856.39	$856.40	0.0%	$1,898.07	$1,898.07	0.0%	$111.88	$111.88	0.0%	$234.89	$234.89	0.0%	$3,101.22	$3,101.23	0.0%	18
SF 55	$767.91	$767.95	0.0%	$1,225.84	$1,225.84	0.0%	$125.69	$125.69	0.0%	$264.27	$264.27	0.0%	$2,383.72	$2,383.75	0.0%	43
	$767.91	$767.95	0.0%	$1,265.38	$1,265.38	0.0%	$125.69	$125.69	0.0%	$264.27	$264.27	0.0%	$2,423.26	$2,423.29	0.0%	13
	$767.91	$767.95	0.0%	$1,463.09	$1,463.09	0.0%	$125.69	$125.69	0.0%	$264.27	$264.27	0.0%	$2,620.97	$2,621.00	0.0%	3
	$767.91	$767.95	0.0%	$1,660.81	$1,660.81	0.0%	$125.69	$125.69	0.0%	$264.27	$264.27	0.0%	$2,818.69	$2,818.72	0.0%	4
	$767.91	$767.95	0.0%	$624.78	$624.78	0.0%	$125.69	$125.69	0.0%	$264.27	$264.27	0.0%	$1,782.66	$1,782.69	0.0%	74
SF 67	$876.68	$876.68	0.0%	$1,384.01	$1,384.01	0.0%	$156.99	$156.99	0.0%	$330.34	$330.34	0.0%	$2,748.01	$2,748.02	0.0%	9
	$876.68	$876.68	0.0%	$1,621.27	$1,621.27	0.0%	$156.99	$156.99	0.0%	$330.34	$330.34	0.0%	$2,985.28	$2,985.29	0.0%	10
	$876.68	$876.68	0.0%	$1,700.35	$1,700.35	0.0%	$156.99	$156.99	0.0%	$330.34	$330.34	0.0%	$3,064.36	$3,064.37	0.0%	1
	$876.68	$876.68	0.0%	$1,818.99	$1,818.99	0.0%	$156.99	$156.99	0.0%	$330.34	$330.34	0.0%	$3,182.99	$3,183.00	0.0%	20
	$876.68	$876.68	0.0%	$1,898.07	$1,898.07	0.0%	$156.99	$156.99	0.0%	$330.34	$330.34	0.0%	$3,262.08	$3,262.08	0.0%	2
	$876.68	$876.68	0.0%	$2,016.70	$2,016.70	0.0%	$156.99	$156.99	0.0%	$330.34	$330.34	0.0%	$3,380.71	$3,380.72	0.0%	12
	$876.68	$876.68	0.0%	$688.05	$688.05	0.0%	$156.99	$156.99	0.0%	$330.34	$330.34	0.0%	$2,052.06	$2,052.06	0.0%	111
SF 75	$1,040.35	$1,040.32	0.0%	$1,463.09	$1,463.09	0.0%	$209.48	$209.48	0.0%	$440.44	$440.44	0.0%	$3,153.37	$3,153.33	0.0%	22
	$1,040.35	$1,040.32	0.0%	$1,700.35	$1,700.35	0.0%	$209.48	$209.48	0.0%	$440.44	$440.44	0.0%	$3,390.63	$3,390.59	0.0%	12
	$1,040.35	$1,040.32	0.0%	$1,779.44	$1,779.44	0.0%	$209.48	$209.48	0.0%	$440.44	$440.44	0.0%	$3,469.71	$3,469.67	0.0%	1
	$1,040.35	$1,040.32	0.0%	$1,898.07	$1,898.07	0.0%	$209.48	$209.48	0.0%	$440.44	$440.44	0.0%	$3,588.34	$3,588.31	0.0%	39
	$1,040.35	$1,040.32	0.0%	$1,818.99	$1,818.99	0.0%	$209.48	$209.48	0.0%	$440.44	$440.44	0.0%	$3,509.26	$3,509.23	0.0%	8
	$1,040.35	$1,040.32	0.0%	$1,977.16	$1,977.16	0.0%	$209.48	$209.48	0.0%	$440.44	$440.44	0.0%	$3,667.43	$3,667.40	0.0%	2
	$1,040.35	$1,040.32	0.0%	$3,163.45	$3,163.45	0.0%	$209.48	$209.48	0.0%	$440.44	$440.44	0.0%	$4,853.72	$4,853.69	0.0%	1
	$1,040.35	$1,040.32	0.0%	$814.58	$814.58	0.0%	$209.48	$209.48	0.0%	$440.44	$440.44	0.0%	$2,504.85	$2,504.82	0.0%	186
SF 90	$1,284.58	$1,284.49	0.0%	$2,174.87	$2,174.87	0.0%	$313.07	$313.07	0.0%	$660.67	$660.67	0.0%	$4,433.19	$4,433.10	0.0%	10
	$1,284.58	$1,284.49	0.0%	$3,163.45	$3,163.45	0.0%	$313.07	$313.07	0.0%	$660.67	$660.67	0.0%	$5,421.77	$5,421.67	0.0%	8
	$1,284.58	$1,284.49	0.0%	$3,361.16	$3,361.16	0.0%	$313.07	$313.07	0.0%	$660.67	$660.67	0.0%	$5,619.48	$5,619.39	0.0%	1
	$1,284.58	$1,284.49	0.0%	$1,565.91	$1,565.91	0.0%	$313.07	$313.07	0.0%	$660.67	$660.67	0.0%	$3,824.22	$3,824.13	0.0%	32
Club House	$0.00	$0.00	n/a	$0.00	$0.00	n/a	$ 2,920.73	$ 2,920.73	0.0%	$6,166.17	$6,166.17	0.0%	$9,086.90	$9,086.90	0.0%	
Beach Club	$0.00	$0.00	n/a	$0.00	$0.00	n/a	$ 2,920.73	$ 2,920.73	0.0%	$6,166.17	$6,166.17	0.0%	$9,086.90	$9,086.90	0.0%	
																900

*****The Club House pertains to the Quarry Golf & Country Club and the Beach Club pertains to the Quarry Community Association***

Ninth Order of Business

9A

KUTAKROCK

Kutak Rock LLP
107 W. College Ave., Tallahassee, FL 32301
office 850 692 7300

MEMORANDUM

TO: BOARD OF SUPERVISORS
QUARRY COMMUNITY DEVELOPMENT DISTRICT

FROM: WESLEY HABER

DATE: JUNE 5, 2023

RE: REFRESHER ON SUNSHINE LAW AND PUBLIC RECORDS LAW

I would like to provide a short reminder on Florida's public meeting and record requirements. While many of you are familiar with these requirements, this memorandum provides a refresher to help keep them on your mind. Please take a few minutes to read this memorandum and contact me at your convenience with any questions.

Florida's Government in the Sunshine Law

Generally speaking, Florida's Sunshine Law applies to all formal or informal gatherings of two or more Board Supervisors to discuss matters that **may foreseeably come before the Board for official action**. Section 286.011, Florida Statutes, contains three requirements for such meetings: (1) the meetings must be open to the public; (2) the meetings must be noticed; and (3) minutes of the meetings must be taken. The Sunshine Law is intended to protect the public from "closed door" politics, and Courts broadly construe the law to ensure it meets this remedial and protective purpose.[1] As examples of the broad interpretation of the Sunshine Law, courts and Florida's Attorney General have opined that it extends to:

- Discussions or exchanges between two or more Board Supervisors regarding Board business via email, telephones, Facebook, blogs, and third-party intermediaries.[2]
- Discussions between two or more board members at a noticed public meeting, but conducted in a manner not generally audible to the public in attendance.[3]
- Meetings of advisory groups that have been delegated some decision-making authority (e.g., tasked with responsibility to make recommendations on some Board-related business), whether delegation is by the board or by a single board member.[4]

---

[1] *See, e.g., Wood v. Marston*, 442 So.2d 934, 938 (Fla. 1983).

[2] *See, e.g.*, Att'y General Opinion 08-07 (blogs); Att'y General Opinion 09-19 (Facebook); *State v. Childers* No. 02-219390-MMC; 02-21940-MMB (Escambia Co. Ct., June 5, 2013) (telephones); Att'y General Opinion 74-47 (intermediaries).

[3] *Rackleff v. Bishop*, No. 89-235 (Fla. 2d Cir. Ct., March 5, 1990). *See also* Att'y General Opinion 71-159.

[4] *Wood v. Marston*, 442 So.2d 934 (Fla. 1983). *See also* Att'y General Opinion 75-41.

KUTAKROCK

Knowing violations of the Sunshine Law are a second degree misdemeanor punishable by up to sixty (60) days imprisonment and/or a fine of up to $500.[5] Noncriminal infractions are punishable by a fine not exceeding $500.[6] Significantly, attorneys' fees may be awarded to parties that bring successful suits for Sunshine Law violations, and those fees may be assessed against the individual members of the Board, except in those cases where the Board sought, and took, the advice of its attorney.[7] The availability of attorneys' fees has created a cottage industry among lawyers that specialize in bringing suits for Sunshine Law violations and also supports law suits by newspapers and other "watch-dog" organizations.

Florida's Public Records Law

Board Supervisors are also subject to the duties contained in Chapter 119, Florida Statutes, which creates certain retention and inspection requirements for public records. The term "public record" is broadly defined in Section 119.011(11), Florida Statutes, to include "all documents, papers, letters… or other material, **regardless of the physical form**, characteristics, or means of transmission, made or received… **in connection with the transaction of official business by any agency**." The nature of the record, rather than the form of the record, determines whether it is a public record subject to Chapter 119, Florida Statutes. Thus, the public records law may reach texts, emails, instant messages, and draft and non-final documents. For example, opinions or comments posted on social media websites or blogs by Board Supervisors regarding District matters or matters that may come before the Board are considered to be made "in connection with the transaction of office business" and are, therefore, "public records."[8] This may be true regardless of whether the posts are made on a private social media account, a public social media page, or on a public website.[9] In sum, the courts construe the public records law liberally in favor of openness.[10]

The District has addressed retention of records on its own website. However, posts on third party sites are not under the direct control of the District, but may still be subject to public records requirements. As a result, if you do post on a third-party social media page, we advise that you create a copy of that page, and submit it promptly to the District Manager's office, who will maintain the record as the District's records custodian.

Knowing violations of the public records law is a misdemeanor of the first degree punishable by up to one year in prison and/or a fine of $1,000 in addition to possible impeachment

---

5 286.011(3)(b), Fla. Stat.

6 286.011(3)(a), Fla. Stat.

7 286.011(4); (5), Fla. Stat.

8 Att'y General Opinion 09-19.

9 Att'y General Opinion 08-07.

10 *Dade Aviation Consultants v. Knight Ridder, Inc.*, 800 So.2d 302, 304 (Fla. 3rd Dist. Ct. App. 2001).

KUTAKROCK

and removal from office.[11] Noncriminal violations are punishable by a fine not exceeding $500.[12] As in the Sunshine Law context, attorneys' fees may be awarded to parties that bring successful suits for public record law violations and the availability of attorneys' fees has created a cottage industry of lawyers and watch-dog organizations that specialize in bringing suits for public record law violations.[13]

Best Practices for Social Media

While social media is a powerful tool for Board communication with constituents, use of social media by Board Supervisors presents the risk of violation of both the Sunshine Law and the Public Records Law. Here are some suggestions to minimize these risks:

1. Do NOT post on a social media page in response to another Supervisor's post. Also, do NOT direct others to make such a post on your behalf.
2. If you do post on a social media page, create a copy of that page, and submit it promptly to the District Manager's office, who will maintain the record as the District's records custodian.
3. Maintain District-related email separate and apart from any personal e-mail.
4. If in doubt about the accuracy of any planned posts, please consult with staff first, or feel free to direct a constituent with a particular question to staff for follow-up.
5. If you want to set up your own Facebook or other account where District business will be discussed, please consult further with District staff first.

I hope this information is helpful to you. If you ever have questions about how to handle a Sunshine Law or public records issue, please do not hesitate to contact me or another member of the District's staff.

---

[11] 119.10, Fla. Stat.

[12] 119.10, Fla. Stat.

[13] *See, e.g.,* Taitt, Sarah, *Florida Public Records Law: The Battle Over Attorneys' Fees*, The Florida Bar Journal, vol. 9, no. 3 (March 2017).